AUSTRALIAN POST OFFICE

COURSE OF TECHNICAL INSTRUCTION

Engineering Training Section, Central Administration, Postmaster-General's Department, Melbourne. C.2.

RADIO II

AUSTRALIAN POST OFFICE

COURSE OF TECHNICAL INSTRUCTION

Engineering Training Section, Central Administration, Postmaster-General's Department, Melbourne. C.2.

RADIO II.

(Issued 1951.)

PAPER NO. 1.

Propagation of Radio Waves.

PAPER NO. 2.

Aerials and Radiators.

PAPER NO. 3.

Aerial Coupling Circuits. ✓

PAPER NO. 4.

Aerials for High Frequency Transmission. ✓

PAPER NO. 5.

Radio Receiving Principles.

PAPER NO. 6.

Radio Receiving Principles (Continued).

PAPER NO. 7.

Radio Receiving Principles (Concluded).

PAPER NO. 8.

Radio Receiver Performance.

PAPER NO. 9.

Power Supplies for Radio.

PAPER NO. 10.

Ionosphere Transmission. ✓

PAPER NO. 11.

Miscellaneous Radio Items.

4305/57 - L

INDEX.

INDEX.

COMMONWEALTH OF AUSTRALIA.

Chief Engineer's Branch,
Postmaster-General's Department,
Treasury Gardens,
Melbourne, C.2.

COURSE OF TECHNICAL INSTRUCTION.

RADIO II. PAPER NO. 1.

PROPAGATION OF RADIO WAVES.

CONTENTS:

1. INTRODUCTION.

1.1 Radio is the transmission of radio frequency waves through space, and is a special case of the propagation of electromagnetic waves. The electromagnetic energy is produced when varying currents flow in a conductor, or whenever an electrical charge is accelerated, but may also be produced by displacement currents or oscillating dipoles. In order that the radiated energy may be appreciable, it is necessary that the system of conductors should not confine the electromagnetic field. Thus, a vertical wire is a much better radiator than a loop or coil because the radiation is unimpeded by surrounding conductors.

2. RADIATED FIELD OF RADIO.

2.1 When a radiator or aerial (sometimes called antenna) is excited at radio-frequency by an electric current, an electromagnetic field moves out into space with the speed of light, (approximately 186,000 miles or 300,000,000 metres per second). The wave which is set up is transverse, and the direction of travel is perpendicular to the wave-front. The wave has an electrostatic vector or component parallel with the radiator and an electromagnetic component at right angles to it, and also at right angles to the direction of wave propagation. These components are incapable of existing one without the other, and reach

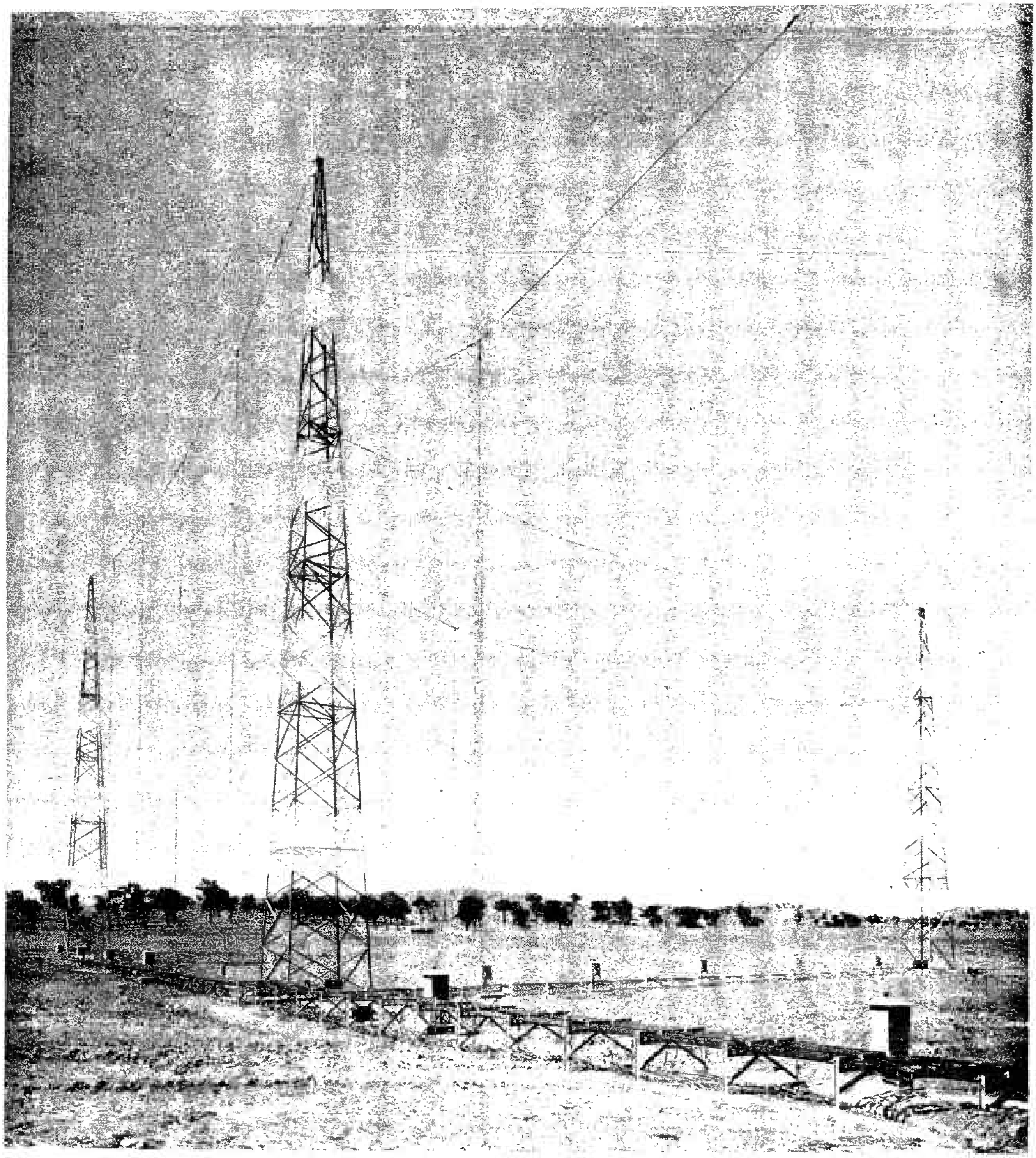

AERIALS AND SUPPORTING TOWERS.
20 kW H.F. DIPOLE (S.T.C.).

their maximum and minimum values simultaneously, that is, they are in time phase, but, due to their being at right angles to each other, are said to be in "space quadrature."

Fig. 1 illustrates this point.

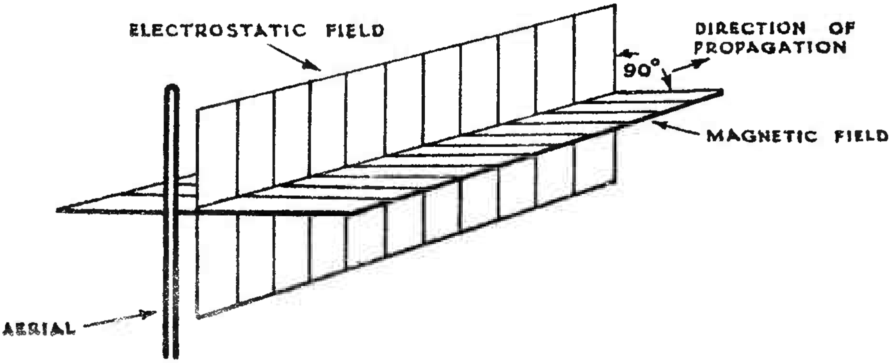

RADIATED FIELD OF RADIO.

FIG. 1.

It will be seen from Fig. 1 that the electromagnetic vector is at right angles to the electrostatic vector which is parallel to the radiator, and that both are at right angles to the direction of wave propagation. Actually, the field shown would exist all around the antenna unless it was a directive type. A theoretical study of radiation shows the fields to have two components -

(i) A component (the electrostatic field) varying inversely as the distance from the radiator, termed the "Radiation Field."

(ii) A component (the electromagnetic field) varying inversely as the square of the distance from the radiator, called the "Induction Field."

The energy of the induction field returns to the conductor at the completion of each cycle, whereas the radiation field detaches itself and travels into space. Thus (i), the electrostatic, or more usually termed "electric" field, is the useful one.

The radiation and induction fields are equal at a distance $\frac{\lambda}{2}$ from the radiator. (λ = wavelength of signal in metres.)

2.2 Energy is radiated from a circuit in the form of Electromagnetic Waves whenever the value of the current flowing in the circuit changes. This radiated energy travels from the circuit into

/space

space with a velocity equal to that of light. An alternating current is a current which is continually changing in value, and, therefore, it follows that from a circuit carrying an A.C. there is a continuous radiation of energy. This may seem strange because, in normal A.C. theory, the energy input to a circuit is assumed to balance the energy output of the circuit without mention of an escape of energy from the circuit in the form of electromagnetic radiation. If an A.C. is flowing in a circuit of inductance (L henrys) and resistance (R ohms), the energy supplied to the circuit is, according to simple A.C. theory, all dissipated as heat, and it is assumed that -

Energy input = Energy dissipated as heat.

This statement is, however, not actually correct, and it should be re-written thus -

Energy input = Energy dissipated as heat + Energy radiated.

2.3 Radiated energy in ordinary A.C. theory is neglected because the radiation effect is dependent upon frequency, and, at low frequencies, the power radiated from an A.C. circuit is negligible. The amount of energy radiated from an A.C. circuit rises very rapidly as the frequency of the current rises, and this energy, ignored by the power engineer, makes possible radio signalling. Remembering that the frequency of the A.C. used for power and lighting is usually 50 c/s, it will not be surprising to find that the frequencies of the A.C. in radio signalling vary from tens of thousands to thousands of millions of c/s.

2.4 The amount of energy radiated by a circuit carrying an A.C. depends not only on the frequency of the A.C. in the circuit, but also upon the form and dimensions of the circuit. If an A.C. of 2 amperes with a frequency of one million c/s is flowing in a 12 metre vertical wire, the lower end of which is earthed, approximately 10 watts (10 joules per second) will be radiated from the wire. With the wire bent into the form of a 12 turn loop, remote from earth, the radiation will fall to about 15 μW with the same current of 2 amperes at the same frequency. The practical Radio Transmitter consists of an alternator capable of causing high frequency currents to flow in an "aerial circuit," a circuit specially designed to have good radiating properties, and the actual radiating portion of the aerial circuit. The aerial itself is often a vertical rod or wire with its lower end earthed.

The production of this radiation will now be discussed in more detail.

/2.5

2.5 When space is strained, by means of an A.C. flowing in a circuit designed to subject a maximum amount of the propagation medium to the strain, two interrelated strains are produced.

When the voltage is a maximum, the energy in the circuit is "potential" or "electric" and the electrons have ceased to flow. When the current is a maximum, the energy in the circuit is "kinetic" or "magnetic" and is due to the electrons in motion.

Both of these sources of strain are essential to the setting up of wave motion. It is only by a combination of both an electric field and a magnetic field that an electromagnetic wave can be produced, in which the energy is continually being transferred from the potential or electric form to the kinetic or magnetic form. Despite the dependence of both forms of strain on electrons and the equivalence of a magnetic and a moving electric field, it is convenient to consider electromagnetic waves as a partnership of moving electric and magnetic fields, although these are really two different views of the same phenomena.

2.6 Electromagnetic Waves as Travelling Magnetic Fields. Fig. 2a represents a plan view of a vertical conductor which is carrying an alternating current. At the instant shown, the current is at maximum and the lines round the conductor represent the flux of the magnetic field surrounding it. As the current in the wire dies away, the magnetic field surrounding the wire becomes weaker and weaker, and it is customary to assume that when the current reaches zero the magnetic field also becomes zero, that is, the magnetic flux disappears when the current falls to zero. This, however, is not true (for, if true, radio communication would not be possible) and the state of affairs as the current in the wire collapses is as follows: when the current starts to fall, the field immediately next to the wire starts to decrease, but the more distant parts of the field do not begin

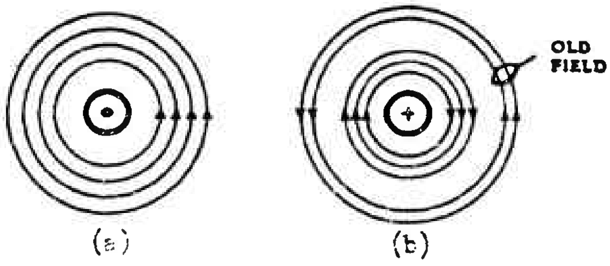

PLAN VIEW OF VERTICAL CONDUCTOR
CARRYING AN A.C.

FIG. 2.

/to

to decrease until a little later. It takes a definite time for the effect of the falling current to make itself felt in the space outside the wire. The farther a point is from the wire the greater is the time lag between the falling current in the wire and the decreasing field at the point. Thus, the inside flux ring of Fig. 2a will start to collapse a fraction of a second after the current has started to fall, the second flux ring will start to collapse a fraction of a second later than the first, and so on throughout the whole field until the outermost ring is reached. The magnetic field, therefore, does not collapse with the current but lags behind the current. Thus, when the current reaches zero there is still a magnetic field outside the wire, that is, there are still some rings of magnetic flux surrounding the wire.

2.7 The current in the wire does not remain at zero, it reverses and starts to rise in the opposite direction, and a new magnetic field begins to build up in the opposite direction to the first field. This new field may be imagined as pushing outwards on the remains of the old field, and the latter goes travelling off into space with the velocity of light. Fig. 2b shows the rising new field pressing outwards on the flux of the old field. In time, this new field will reach a maximum and then start to collapse. Eventually it also leaves a part of itself outside the wire to be thrust out into space by yet another new and rising field. Every time that the A.C. passes through a complete cycle, two successive magnetic fields, opposite in direction, are thrown off or "radiated" into space. Thus, the A.C. in the wire causes the radiation from the wire of a continuous succession of travelling magnetic fields which can be represented pictorially by rings of magnetic flux drawn as in Fig. 3. These travelling magnetic fields may be regarded as electromagnetic waves.

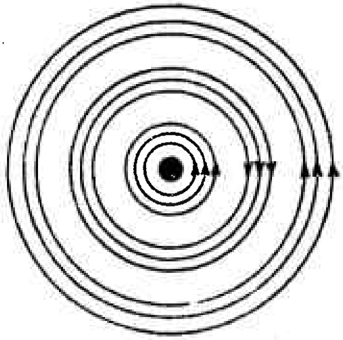

REPRESENTATION OF TRAVELLING MAGNETIC FIELDS.

FIG. 3.

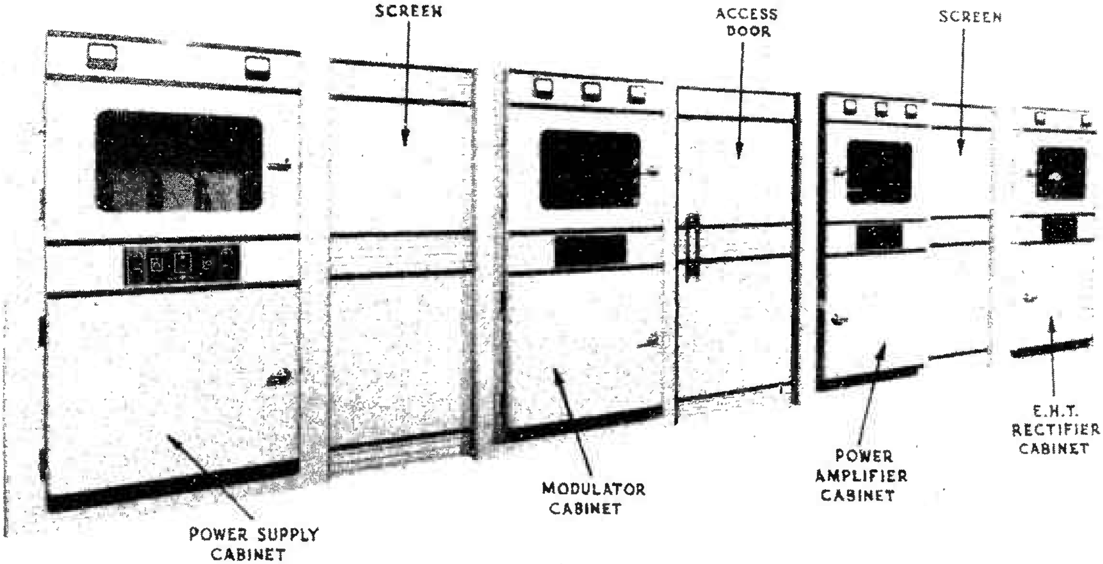

Front View.

10 kW B/C Transmitter (S.T.C.).

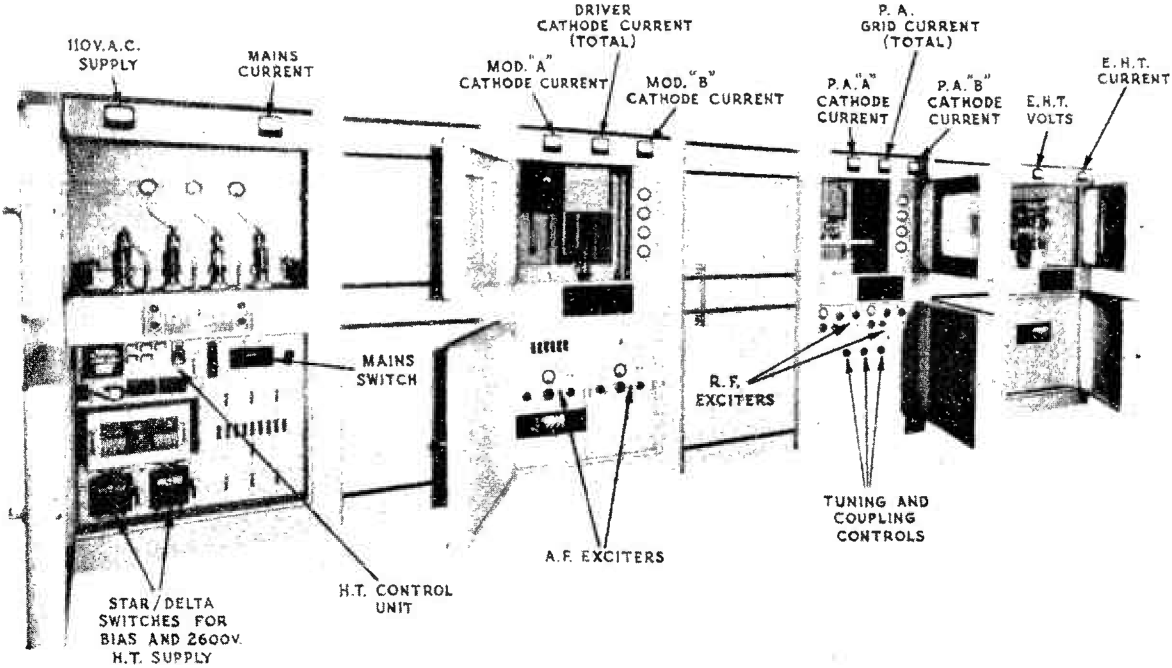

Front View, Doors Open.

MODERN RADIO TRANSMITTER (S.T.C.)

3. BASIC PRINCIPLES OF RADIATION.

3.1 It is difficult to satisfactorily illustrate the action of radiation but Fig. 4 is an attempt to do this and may furnish an idea of what occurs in and near an aerial. Fig. 4 shows a simple type of oscillator circuit consisting of two condenser plates joined together by an inductance, in the centre of which is an A.C. generator. This simulates fairly closely the conditions of an aerial. At the commencement of the cycle, let the condenser plates be charged to maximum potential so that the upper plate is positive and the lower one is negative. There is then an electric field between the two plates, the lines of force being as shown in Fig. 4.

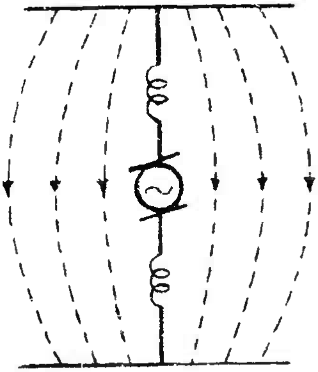

SIMPLE OSCILLATOR CIRCUIT WITH ELECTRIC FIELD.

FIG. 4.

When the instant of maximum potential on the plates has passed, current will commence to flow downwards. The electric field starts to collapse, as shown in Fig. 5.

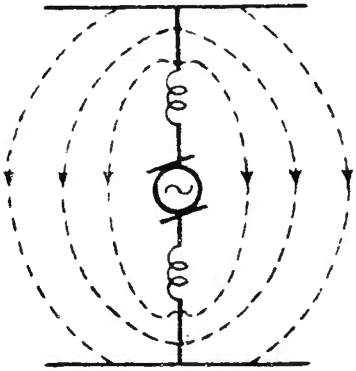

START OF COLLAPSE OF FIELD.

FIG. 5.

The current continues to flow after the potential difference across the condenser plates is reduced to zero, and, in so doing, starts to charge the condenser plates to the opposite polarity, giving rise to new lines of force in the opposite direction to the previous field. Due to the fact that the velocity of lines of electric stress in space has a definite numerical value (300,000,000 metres/second), collapse of the initial field lags a little on the changes in potential which caused it to take place, and the new electric field (see Fig. 6) commences to build up before the first one has completely disappeared.

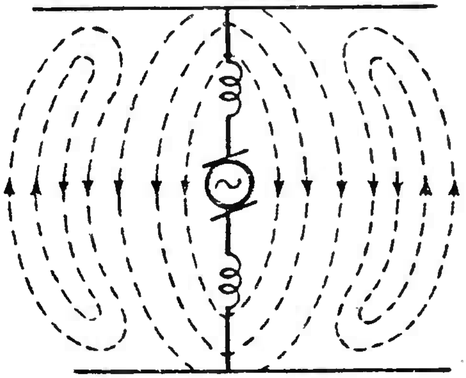

PART OF THE ORIGINAL FIELD IS RADIATED.

FIG. 6.

Now lines of force are a physical conception that is devoid of meaning unless the lines are imagined to exist either between points of different electric potential, or else as closed

/loops

loops. In this case, the lines most distant from the oscillatory system have insufficient time to collapse entirely, therefore they become closed loops and are forced outwards in this form by the new electric field. The direction of the lines in the inner surface of the first group of loops being the same as that of those on the outer surface of the second group. As the current oscillates in the circuit, a series of these closed loops is sent off into space radially from the oscillatory system, each set repelling its predecessors.

This type of oscillation is produced by an oscillating system excited in the centre (see Fig. 4). In most of the National Broadcasting Stations the radiating system utilises the earth as the bottom plate of the condenser, and the radio frequency power is fed in at the lower end of the radiator so that it can be regarded as the upper half of the symmetrical type of oscillating system, as shown in Fig. 4. Fig. 7 shows how the electric field from such an aerial spreads out in the form of annular loops of ever-increasing height but constant width (wavelength).

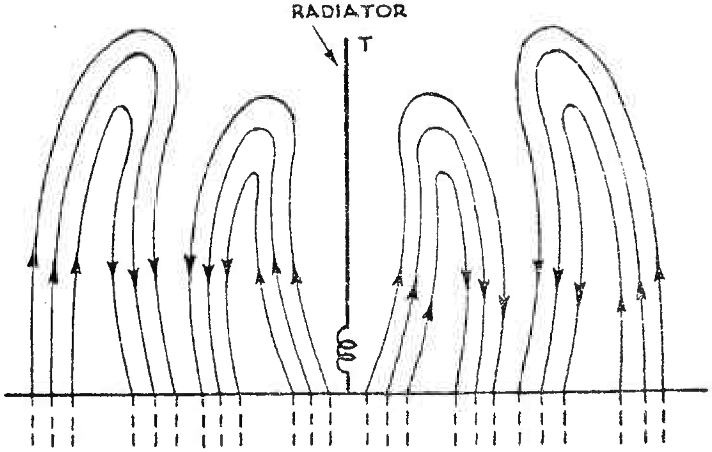

RADIATION OF ELECTRIC FIELD IN ANNULAR LOOPS

FIG. 7.

3.2 Polarisation. Polarisation is the term used to indicate the direction of the electrostatic lines of force of the electric field. An electromagnetic wave which has its electric component of force vertical to the earth's surface is said to be vertically polarised, and one which has its electric field parallel to the earth's surface is said to be horizontally polarised. Thus, vertical aerials radiate vertically polarised waves, and horizontal aerials horizontally polarised waves. Broadcast band (550-1,500 kc/s) aerials are always vertically polarised because the conducting earth short circuits the horizontally polarised component of the wave, and thus reception in this band is usually more efficient when a vertical aerial is used.

3.3 Wavelength. The electromagnetic radiation from an aerial may be

/specified

specified in terms of wavelength (denoted by the symbol λ) or in terms of frequency. If the A.C. in the radiator wire T of Fig. 7 has a frequency of f c/s, then f complete waves will be radiated from the aerial every second and the frequency of the electromagnetic radiation is f c/s. After the aerial has been radiating for one second, the travelling magnetic fields in the space round the aerial will extend to a distance of 3×10^8 metres from the aerial where 3×10^8 is the velocity in metres per second with which the fields travel outwards. It follows, therefore, that f complete waves occupy a total distance of 3×10^8 metres, then one complete wave occupies a total distance of -

$$\frac{3 \times 10^8}{f} \text{ metres.}$$

The distance occupied by one complete wave is the wavelength of the electromagnetic radiation, and the relation between frequency and wavelength, therefore, must be as follows -

$$\lambda = \frac{3 \times 10^8}{f} \text{ metres}$$

$$\text{or } f = \frac{3 \times 10^8}{\lambda} \text{ c/s}$$

where 3×10^8 is the velocity of the electromagnetic waves in metres per second.

3.4 Attenuation of Radio Waves Passing over the Earth's Surface.

Screening Effects. When electromagnetic waves move outwards over the surface of the earth from a vertical transmitting aerial, voltages are induced and radio frequency currents flow in the earth over which the waves are passing. Energy, therefore, is dissipated as heat in the surface layers of the earth, and this energy is abstracted from the electromagnetic waves. If an electromagnetic wave travelling over the earth's surface is continually giving up energy, it is weakened or "attenuated."

It can be shown that the magnitude of the energy loss that occurs when electromagnetic waves travel over the surface of the earth is dependent upon the conductivity of the earth's surface layer and the wave frequency. Energy loss increases as the conductivity of the surface layer of the earth decreases. If the earth's surface were a perfect conductor there would be no energy loss. Sea water has a high conductivity, and the attenuation of electromagnetic waves passing over sea is comparatively small. Wet soil causes less attenuation than moist soil, moist soil causes less attenuation than dry soil, and so on. It has been observed that electromagnetic waves are often heavily

/attenuated

attenuated when a densely wooded region intervenes between transmitter and receiver.

The attenuation of waves passing over the earth's surface increases as the wave frequency increases, that is, the shorter the wavelength the greater the attenuation.

3.5 Absorption of Radio Waves. There is, however, an additional reason for the diminution in intensity of radio waves as they travel from the antenna. This is due to absorption. Some of the energy is wasted in the surface of the earth, some in trees and buildings, and some travels upward from the earth's surface. These combined effects make the average signal fall off much faster than in direct proportion to the distance from the transmitter. The exact amount of diminution of the signal differs for different localities, seasons, geographical features, etc. It is different in summer from winter, and entirely different in night and day.

On account of absorption it is an uneconomical arrangement to locate a broadcasting station in the vicinity of tall steel buildings, as a great amount of its radiated energy is absorbed in the immediate vicinity of the station. Thus, it is correct practice to locate the station at a distance from the city, placing the studios for convenience in the city and connecting the station by means of high quality telephone lines.

3.6 Day and Night Variations in Signal Strength. At night, due to variations in atmospheric conditions, the energy losses in transmission are decreased and the attenuation of the wave is correspondingly diminished. In practice, it is generally found that transmission is very much more effective at night than during the day, the range being considerably increased.

The electromagnetic waves are generally believed to be propagated through the layer of atmosphere immediately adjacent to the earth's surface. Above this the atmosphere, due to its low density and the ionising action of the sun's rays, rapidly increases in conductivity and forms a bounding plane of high conductivity for the layer of atmosphere adjacent to the earth whose resistance is comparatively high.

During the day, however, this layer adjacent to the earth is also ionised to a small extent, increasing its conductivity and decreasing the efficiency of transmission of the electromagnetic waves, which is a maximum for a dielectric possessing zero conductivity. With the removal of the sun and its ionising effects on this transmitting layer of atmosphere, this efficiency is increased and also the range of transmission.

/According

According to the theories of wave propagation, the shorter the wavelength the greater is the absorption as far as the direct or ground wave is concerned. Dealing, then, with the ground wave only, the long waves suffer the least whilst the short suffer the greatest attenuation.

There is, however, the second wave to be considered, that is, the sky wave or reflected wave. It has been stated that, for good reflection, the reflecting surface must be large as compared with the wavelength being reflected. Therefore, the short waves undergo the greatest reflection as compared with the medium and long waves. However, as against this, they are more subject to fading due to the movement of the Heaviside layer which will be referred to later in this book.

Furthermore, experiment has proved that as the wavelength for which the receiver is tuned is increased, the static audibility increases; this increase being roughly proportional to the wavelength.

Summarised then:

- (i) The long waves suffer the least attenuation in the ground wave.
- (ii) The sky wave is only reflected to a moderate degree with the long waves.
- (iii) Long waves are more subject to static than the medium or short waves.
- (iv) Fading is not as pronounced with the long waves as with the medium and short waves.

It would then appear that the long waves are most suitable where a constant field strength is desired over a given area, such as serving a closely settled community. On account of their stability, they are suitable for ships' stations and transoceanic communication over certain periods of the day.

The short waves meet requirements of transmission over long distances on account of the reflection phenomena, but, consequently, suffer from fading. The medium waves are reasonably stable, covering moderately long distances with attendant fading. These suffer from the incidence of static in the tropics and sub-tropics, but not to such an extent as the long waves.

The foregoing notes will now be expanded as they particularly apply to propagation in the generally accepted frequency bands -

- (i) Ground Wave -
  - (a) Low frequencies.
  - (b) Medium frequencies.
- (ii) Sky Wave -
  - (a) High frequencies.
- (iii) Ultra-high frequencies.

/Station

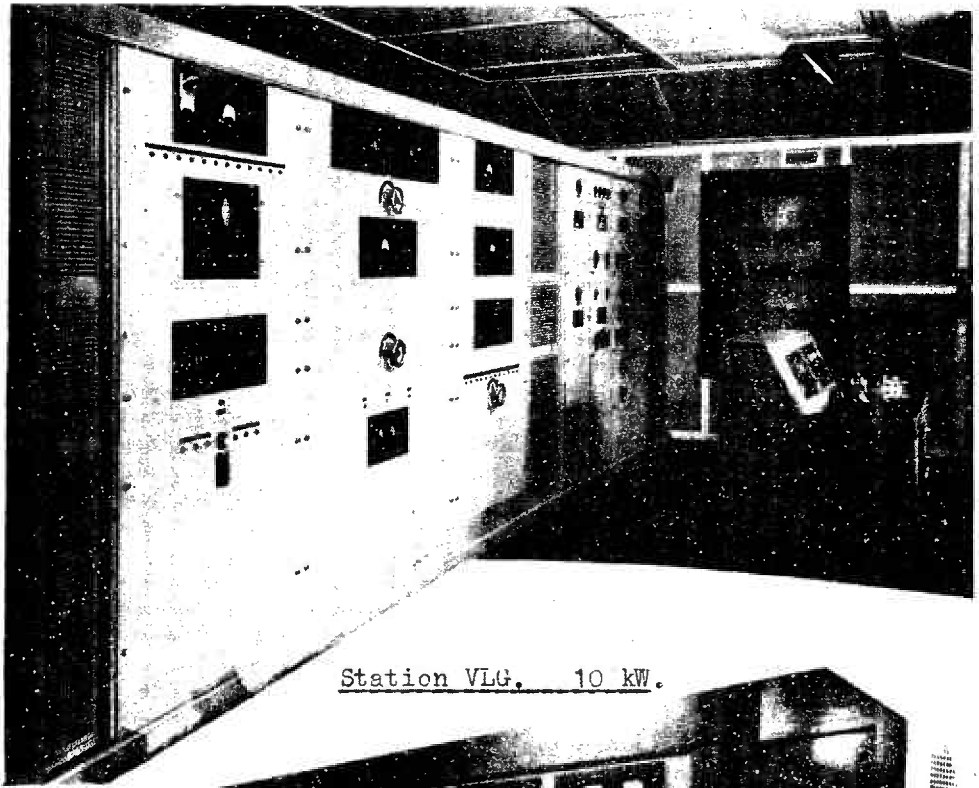

Station VLG. 10 kW.

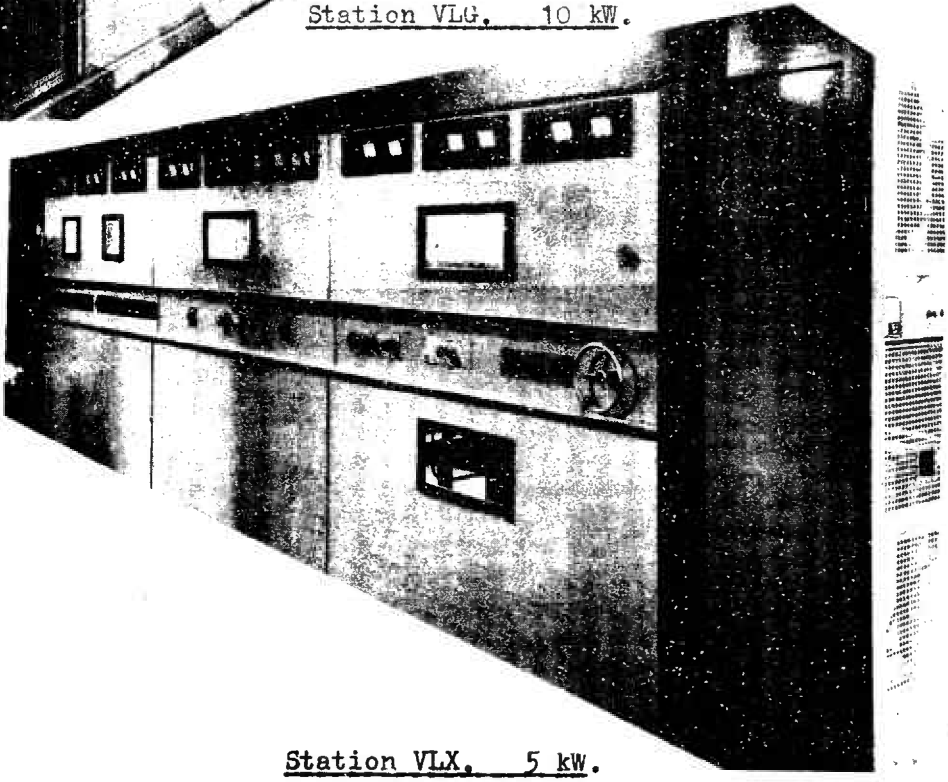

Station VLX. 5 kW.

RADIO STATIONS.
(LYNDHURST, VIC.)

4. PROPAGATION CHARACTERISTICS.

4.1 General. When a radio wave leaves the radiator and travels over the earth's surface, it suffers attenuation due to earth losses and spreading. The attenuation is a complex effect depending upon the frequency, ground conductivity and dielectric constant of the earth. The lower the frequency and the higher the conductivity, the less the attenuation. Sea water is the best conductor for propagation purposes, and, using a suitably low frequency, say 500 kc/s, the intensity varies inversely as the distance, that is, there is no attenuation up to distances between 62-125 miles. Over hilly ground, however, the conductivity is low and the wave suffers high attenuation. For example, a 1 kW station over sea water may give an intensity of 2,500 μV/metre at a distance of 60 miles, but over hilly country may only give 50 μV/metre or less. Flat country is the best type of land over which to transmit, and some places give conductivity almost as high as sea water, for example, Northern Victoria and Southern New South Wales. Table 1 shows some typical values of conductivity and resistance -

Type of Ground or Water	Conductivity in E.M.U. Symbol = σ	Dielectric Constant Symbol = k	*fc (kc/s)
Sea water	4.64×10^{-11}	81	350,000
Fresh water	1×10^{-14}	80	220,000
Moist ground	30×10^{-14}	30	7,000
Pastoral, low hills, rich soil.	30×10^{-14}	20	4,500
Densely wooded, marshy country.	7.5×10^{-14}	12	-
Inland soil	10×10^{-14}	15	-
Rocky soil, steep hills	2×10^{-14}	14	2,000
Dry sandy rocky soil	1.5×10^{-14}	8	1,400
Industrial city areas	1×10^{-14}	5	1,400

TYPICAL VALUES OF CONDUCTIVITY AND RESISTANCE.

*NOTE - fc is the frequency below which the effect of the dielectric constant may be neglected.

TABLE 1.

The effect of hills, city buildings and aridness of soil is evident from a consideration of the above table.

The

The value of conductivity and dielectric constant that is effective for radio waves represents the average value for a distance below the surface of the earth, determined by the depth to which ground currents of appreciable amplitude exist. This depth of penetration depends upon the frequency, dielectric constant and conductivity, and is commonly of the order of 5 to 10 feet at the frequencies used in short-wave communication and 50 or more feet at broadcast (medium) and lower frequencies. As a result, the earth constants are not particularly sensitive to conditions existing at the very surface of the earth, for example, after rain or snow. The effective value of the earth constants tends to be substantially independent of frequency over a relatively wide range.

4.2 Groundwave Intensity. Transmission at low and medium frequencies depends on the ground wave when both transmitting and receiving antennae are located at the surface of the earth, the ground wave being considered as that portion of the radiated wave that is affected by the presence of the ground. For analysis it may be divided into two components -

(i) Space wave.
(ii) Surface wave.

The space wave may be considered as being the resultant of two component waves (as shown in Fig. 8), namely, a direct and a ground-reflected wave. When the transmitters and receivers are both located at or near the earth's surface, these two components are of equal magnitude and opposite in phase, and, thus, they cancel.

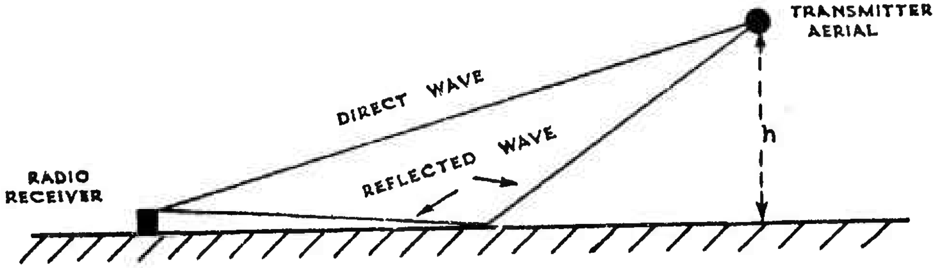

COMPONENTS OF SPACE WAVE.

FIG. 8.

This leaves the surface wave as the only effective component of the ground wave, and this is the actual "ground wave" referred to in medium and low frequency waves. As the antennae are raised, the amplitude of the space wave rapidly increases and it eventually becomes the principal part of the ground wave. This condition is met only when the height "h" of Fig. 8

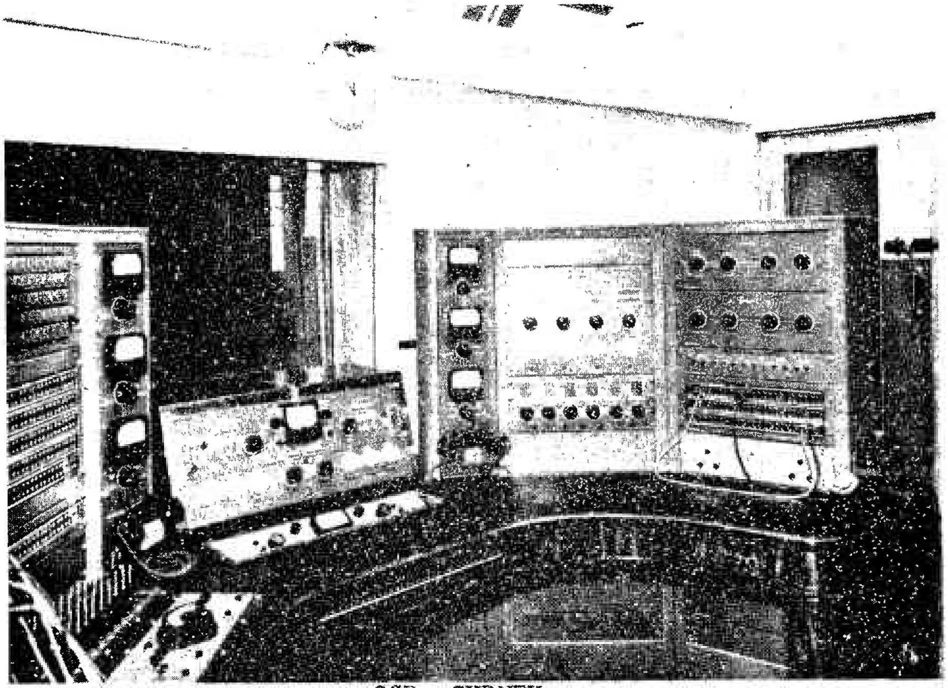

2GB, SYDNEY.
MASTER CONTROL DESK, (A.W.A.).

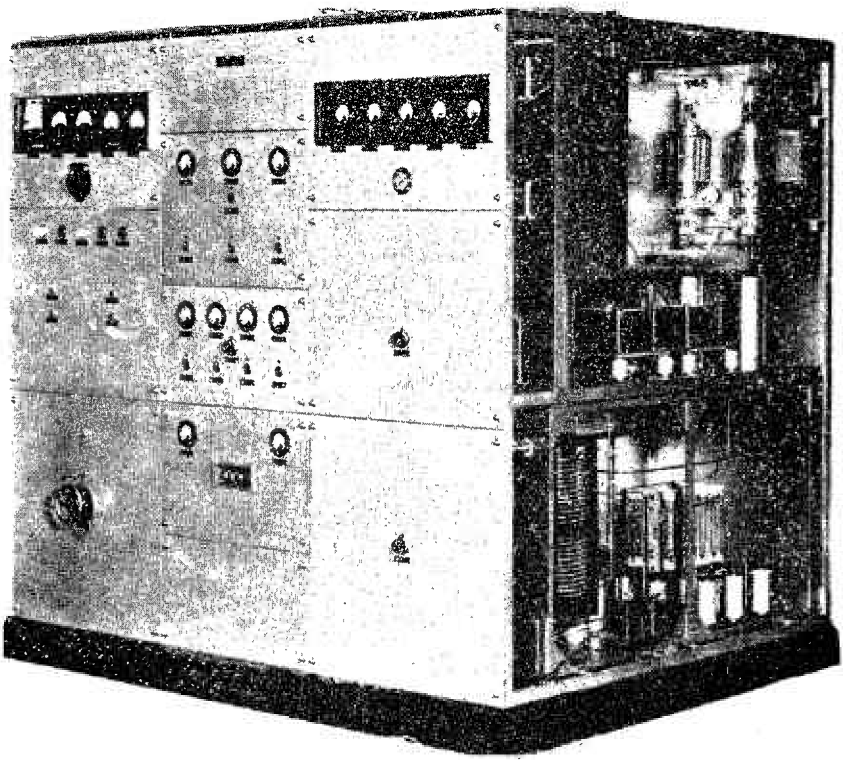

HIGH-LEVEL MODULATED B/C. TRANSMITTER
6GF, KALGOORLIE (S.T.C.).

becomes a few wavelengths or more, as at ultra-high frequencies. As stated previously, the resultant field depends on complex attenuations factors, and the more important of these factors are listed below -

(i) Resistivity and dielectric constant of the earth.

(ii) Frequency of the radiated wave.

(iii) Height of transmitting and receiving antennae (in wavelengths).

(iv) Curvature of the earth.

(v) Distance from receiver to transmitter.

(vi) Variation of refractive index of earth's atmosphere with height.

The electrical constants of the earth affect the rate of attenuation of the surface wave and also the reflection coefficient of the ground-reflected wave. The curvature of the earth makes it necessary for the waves to diffract round the earth in order to reach distant receiving points. Many other interrelated effects manifest themselves but would require too lengthy an explanation.

4.3 Wave Tilt. Another effect due to ground losses is the "tilting" of a vertically polarised wave-front as it travels along the surface of the earth. The tilt is caused by the energy loss which occurs at the lower portion of the wave-front. As the conductivity of the soil decreases and the resistivity increases, so these losses increase and the wave-front tilts forward towards the earth. At broadcast frequencies the tilt never exceeds about 14°, but at higher frequencies it may be about 22°. This tilt is an advantage in one regard as it tends to make the wave-front follow the curvature of the earth and thus improve the service area. One type of aerial makes use of this tilted wave-front to obtain directivity and gain at broadcast frequencies. Fig. 9 shows "tilt." The magnitude

/of

of the wave tilt depends upon the earth's constants and upon frequency. The loss of energy which occurs at the lower portion of the wave-front is due to the currents which penetrate down into the earth. As these currents flow into the earth they are attenuated with distance at a rate depending on constants and frequency.

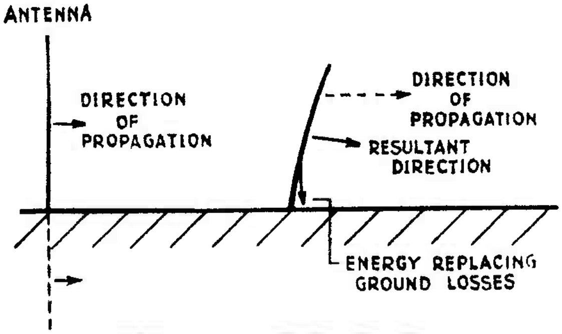

FIG. 9. WAVE TILT.

4.4 Waves below 100 kc/s (low frequency waves). The propagation characteristics of waves in this region are controlled by the following factors -

(i) Ground wave attenuation is very small, so that good ground wave signals are receivable to 500 or 600 miles.

(ii) Penetration of the lowest ionosphere layer is very slight, resulting in less absorption of the signal.

Low frequency waves that have travelled a considerable distance act as though they were propagated in the space between two concentric reflecting spherical shells representing the earth and the lower edge of the ionosphere. The attenuation is due to spreading, absorption at the edge of the ionosphere and at the earth's surface.

Fading is rarely observed at these frequencies, changes of signal strength occurring only gradually.

4.5 Waves between 100 kc/s and 500 kc/s. These waves have similar general propagation characteristics to those below 100 kc/s, some of the effects of attenuation being more marked. The same field intensity formula is applicable with fair accuracy at least over water. The features which are more marked are -

(i) Ground wave dies away more rapidly, reducing the effective distance range.

(ii) Ionospheric absorption is higher during the day.

4.6 Waves between 500 and 1,500 kc/s. This is the normal broadcast band known as the medium frequency band, and the practical problems are primarily concerned with the fact that the objective of a broadcasting station is to deliver to the receiver a signal strong enough to override all ordinary interference, that is, as free as possible from fading, distortion, etc.

The primary service area requires that the ground wave be relatively strong as compared with any interference present, and also that it be several times the strength of any sky wave present.

The secondary service area, depending as it does on the sky wave, must be a poorer quality, since both selective and intensity fading will be present.

Table 1 indicated the suggested field intensities for several types of reception areas. In the Papers in this book on aerials for these frequencies, it will be shown that much investigation has been carried out with the object of improving the ground wave and reducing the sky wave.

The primary coverage depends on the surface wave as previously discussed in this Paper, and the curve of ground wave intensity as a function of distance for a given transmitter power depends upon the earth conductivity, the frequency and the directivity of the transmitting antenna. The dielectric constant of the earth is not important to about 2,000 kc/s, so may be omitted from field intensity calculations in this frequency band. Figs. 10 to 12 show field intensity curves calculated for a number of transmitter frequencies and powers. These curves were based upon two formulae, one for distances to about 60 miles, neglecting the curvature of the earth, and the other for distances greater than 60 miles, taking into consideration the curvature of the earth. The formulae used were taken from "Terman's Radio Engineers Handbook," 1943 edition.

/Fig. 10

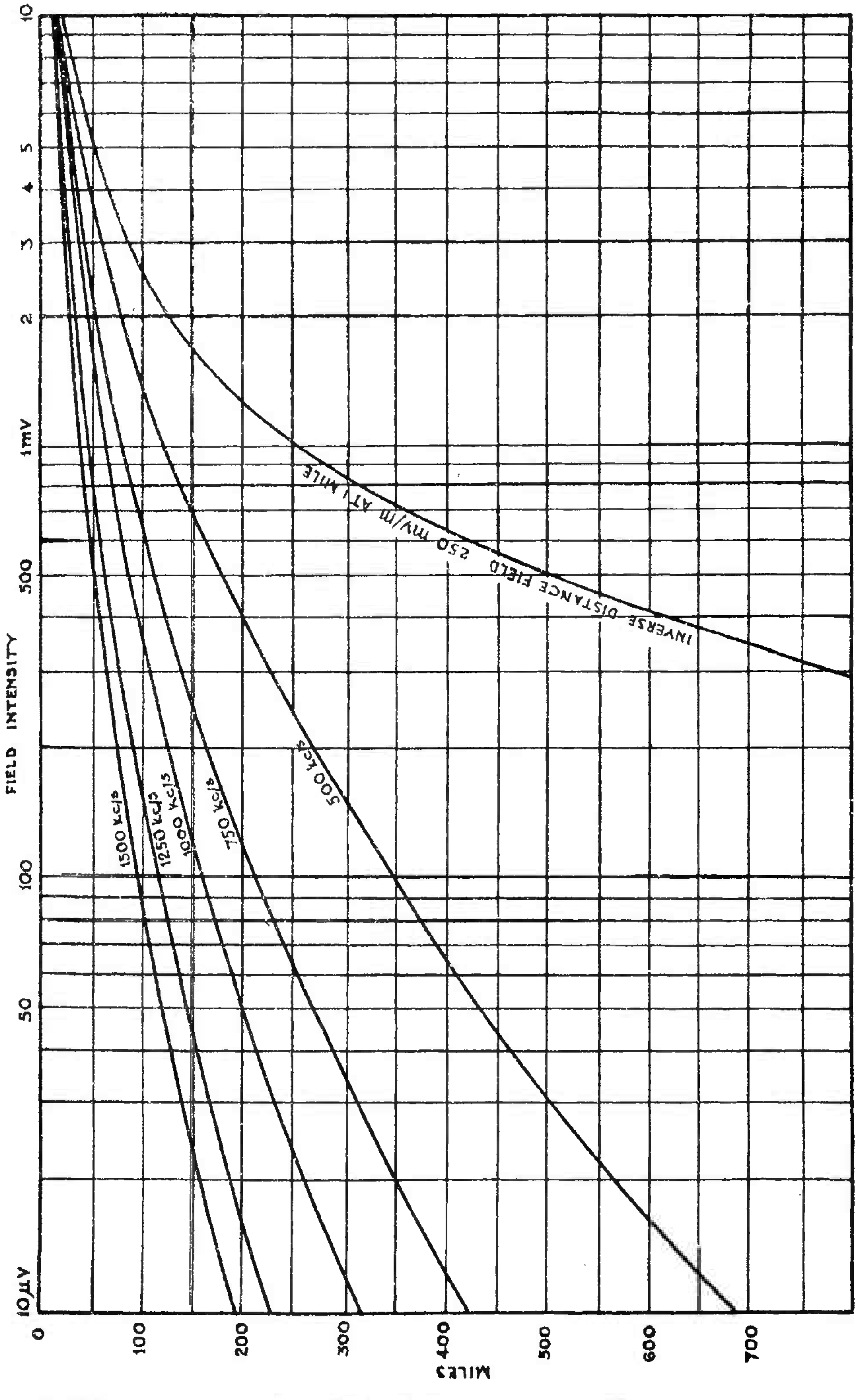

FIG. 10. TYPICAL FIELD INTENSITY CURVES FOR AVERAGE GOOD SOIL CONDITIONS. POWER = 1 kW.

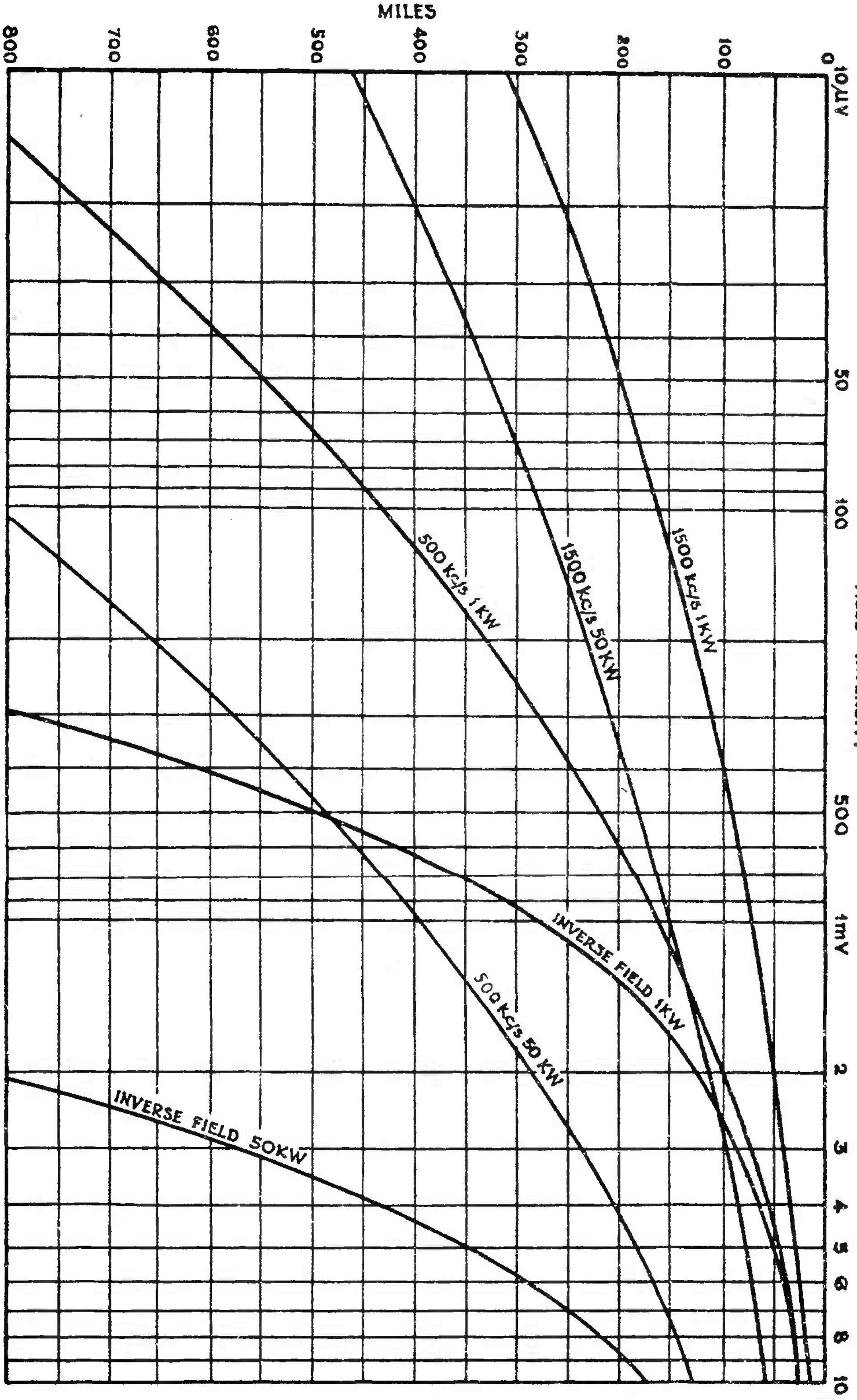

FIG. 11. SHOWING THE EFFECT OF INCREASED POWER ON FIELD INTENSITY.
(MOIST GROUND)

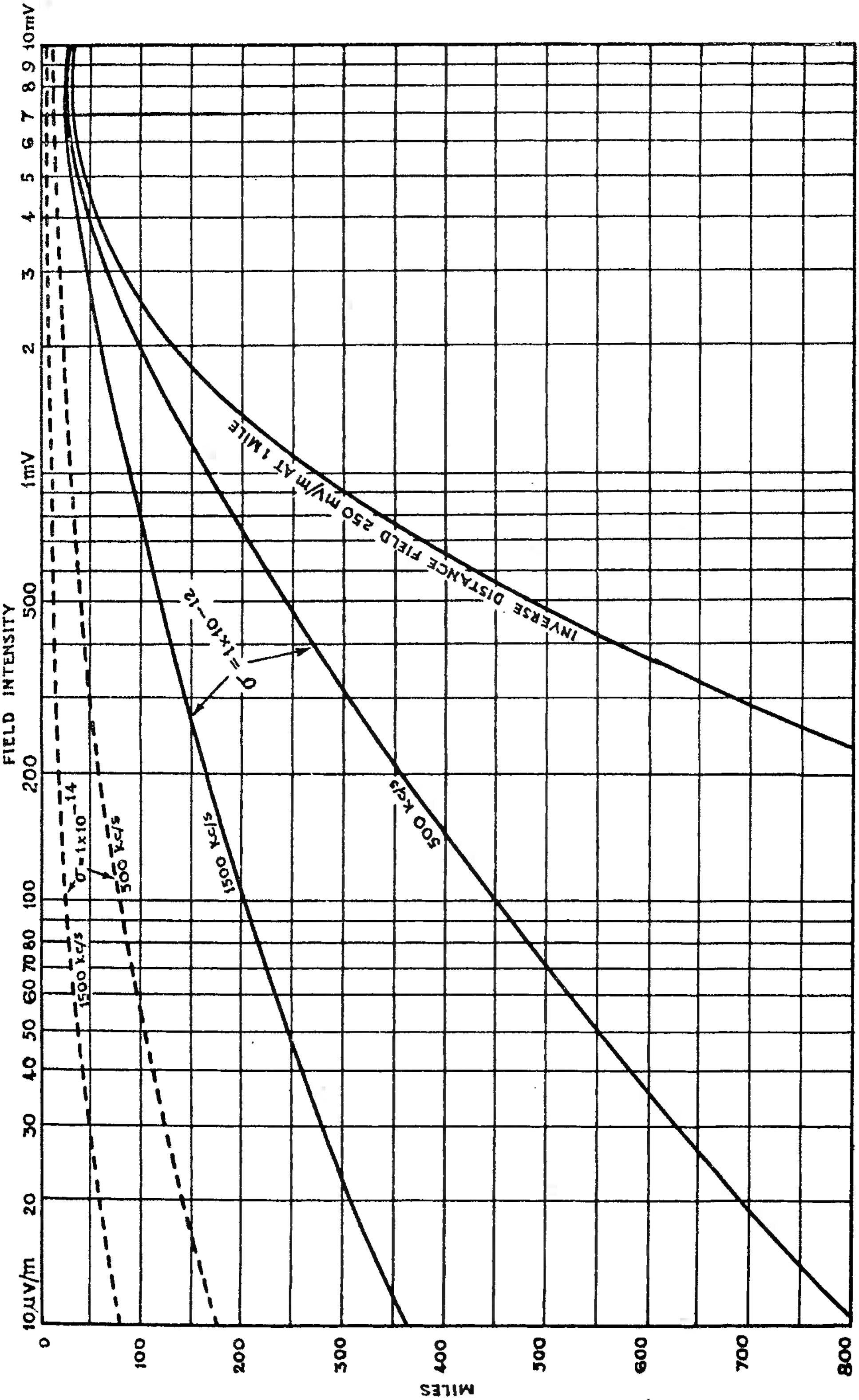

FIG. 12. EFFECT OF SOIL CONDUCTIVITY ON FIELD INTENSITY.
POWER = 1 kW.

4.7 Distances Greater Than About 60 Miles. This formula takes into account the curvature of the earth and is rather involved for inclusion here. Reference to Terman's book will give full details of this operation. In practice two curves were drawn and joined by a transition curve, as shown in Fig. 13. On the graphs will be seen also the "inverse field" which is the field that would exist were no attenuation or absorption present. It varies inversely as the distance from the antenna.

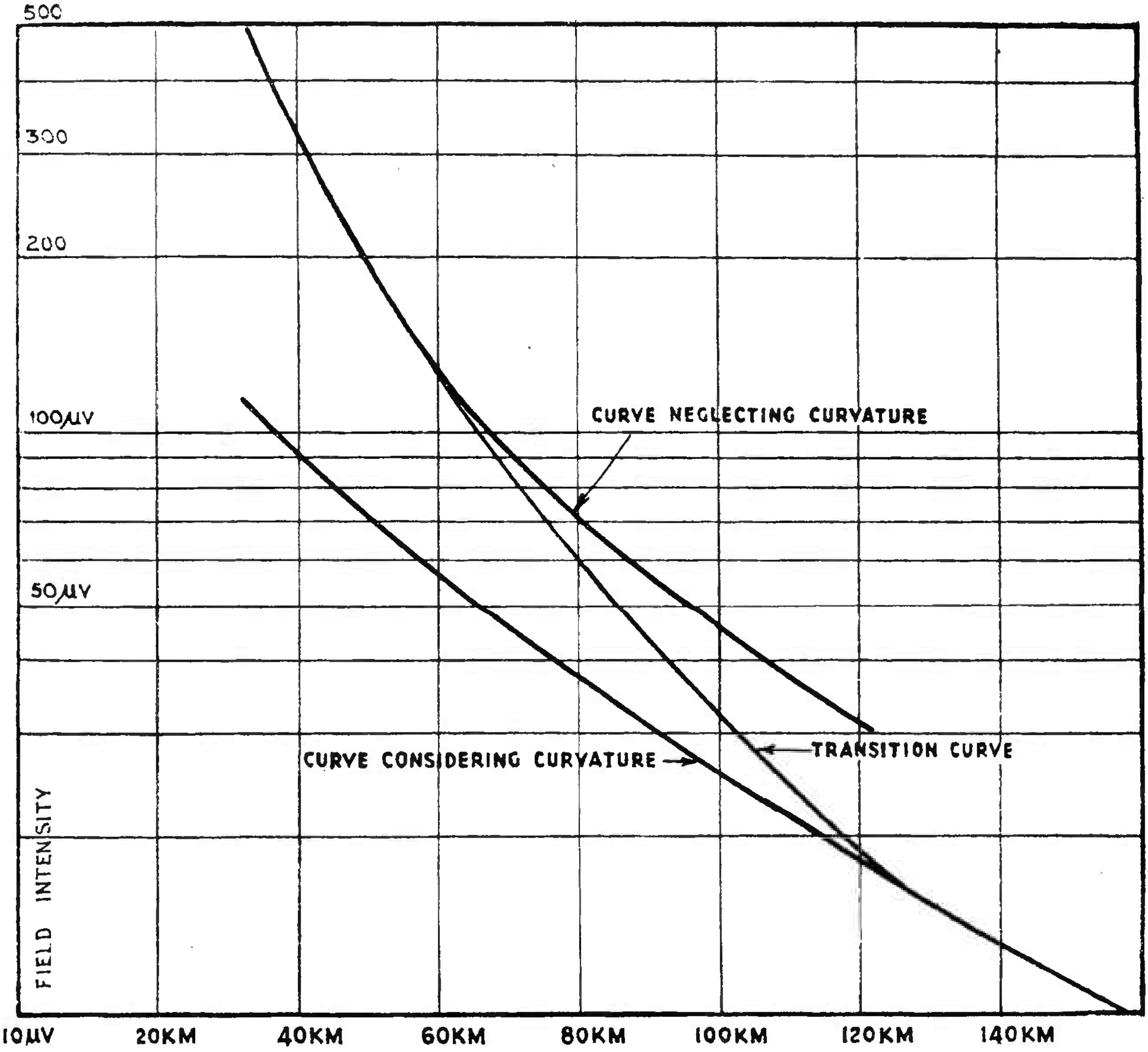

FIG. 13. METHOD OF JOINING THE TWO FIELD INTENSITY CURVES AS DESCRIBED IN THIS PAPER.

Examination of the given curves shows that the distance at which the ground wave can provide primary service is very sensitive to frequency and is much less at the high-frequency end of the band than at the low-frequency end. Earth conductivity is important and has been mentioned in connection with the selection of a transmitter site.

4.8 Sky Wave. This paragraph refers only to the sky wave as it is related to the medium frequency band. Ionosphere transmission will be covered later.

During the day the sky wave at broadcast frequencies is so thoroughly absorbed that it is of negligible importance. With the approach of sunset, however, the sky wave absorption decreases rapidly, as shown in Fig. 14, and after sunset grows relatively small. This condition persists through the night, but, with the approach of sunrise, the sky wave gradually disappears.

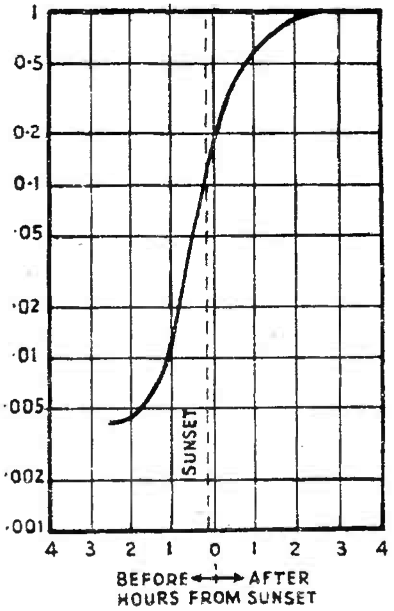

SKY WAVE VARIATION DURING SUNSET PERIODS.

FIG. 14.

The presence of the sky wave is responsible for fading and for the secondary service area of the transmitter.

The intensity of the sky wave is variable and depends upon many factors. It is weak close to the broadcasting station because most antennae radiate negligible energy at high vertical angles. However, this vertical angle decreases with increasing distance to the receiver, and the sky wave intensity thus increases with distance. It then goes through a maximum and dies off with still greater distances. Fig. 15 gives some idea of the relation between the radiation angle and the distance at which the signal returns to the earth.

/Fig. 15.

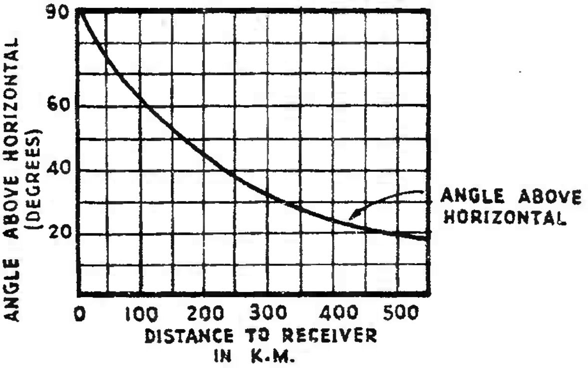

INDICATING THE DISTANCE AT WHICH THE SIGNAL WILL RETURN TO EARTH FOR DIFFERENT RADIATION ANGLES. HEIGHT OF LAYER TAKEN AS 100 KILOMETRES.

FIG. 15.

Fig. 16 shows the different coverage obtained from a high power broadcast transmitter during the day and night.

The intensity of the sky wave can be calculated to a reasonable degree of approximation by assuming -

(i) That the night sky wave is perfectly reflected at about 60 miles in height.

(ii) That the angle of reflection at the layer is equal to the angle of incidence.

(iii) That the reflection coefficient is independent of the angle of incidence and frequency (in the band 500 to 1,500 kc/s).

(iv) That the field intensity of the sky wave is inversely proportional to the distance travelled by the wave in going from transmitter to ionosphere and back.

/Fig. 16.

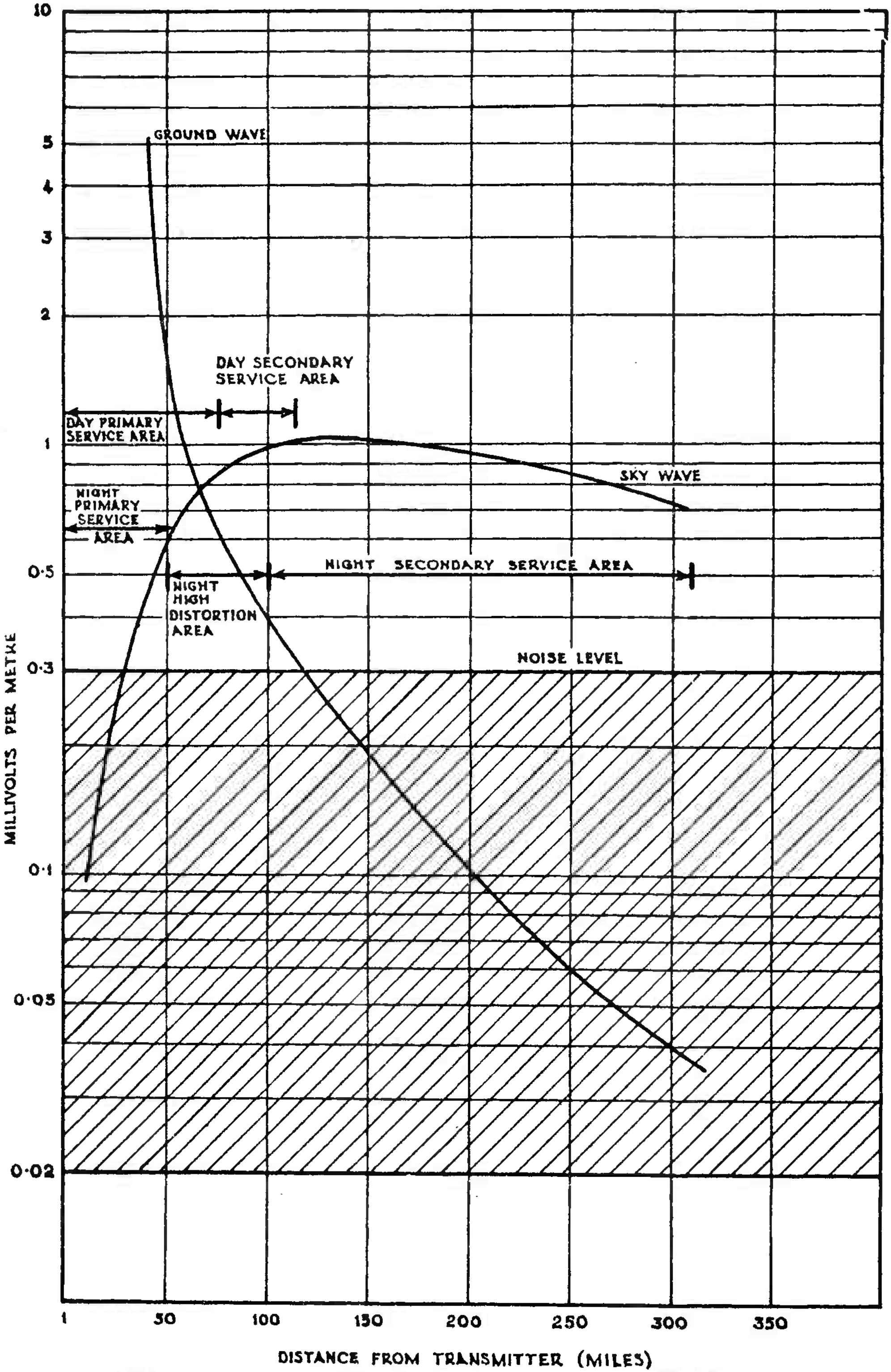

FIG. 16. DAY AND NIGHT COVERAGE OF 50 KILOWATT BROADCASTING STATION.

$\sigma = 5 \times 10^{-14}$ E.M.U. f = 1 Mc/s.

Fig. 17 shows the relation of actual path distance to ground wave distance as stated in paragraph (iv).

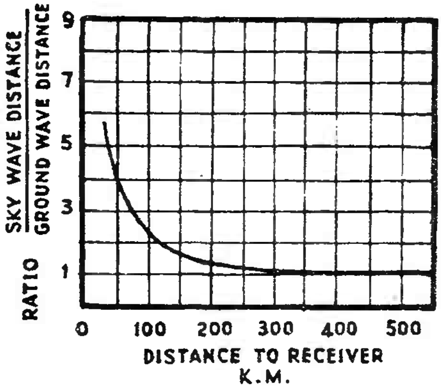

GIVING FACTOR FOR MULTIPLYING GROUND WAVE DISTANCE BY TO OBTAIN ACTUAL PATH DISTANCE.

FIG. 17.

Fig. 18 shows the result of experimental observations of sky wave field intensity in the medium wave band for a transmitter having a radiated field intensity of 100 mV/metres at one mile.

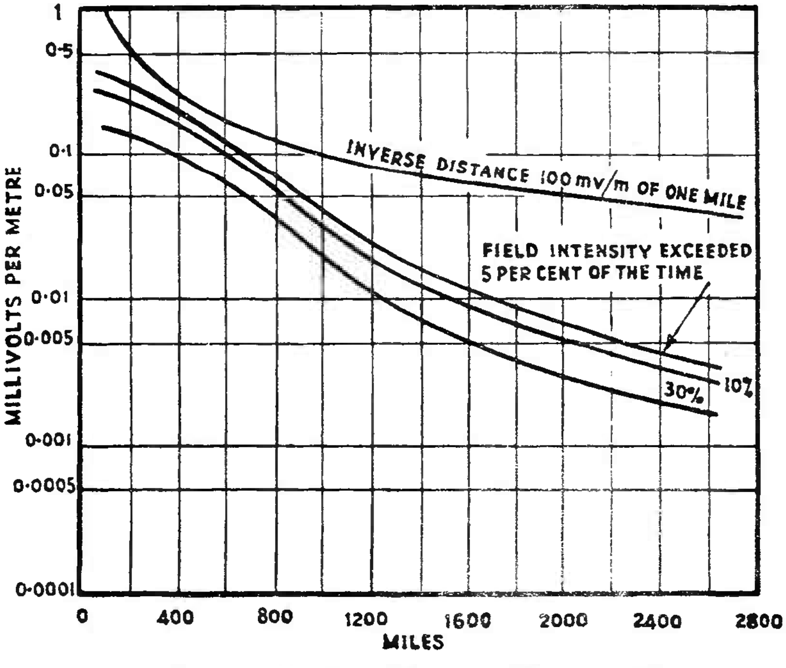

SKY WAVE INTENSITY VERSUS DISTANCE.
RESULT OF OBSERVATIONS IN BROADCAST BAND.

FIG. 18.

4.9 Day Coverage. As mentioned previously, the ground wave furnishes the useful signal and its intensity can be calculated as discussed above.

4.10 Night Coverage. At night the received field is the vector sum of the ground and sky waves as indicated in Fig. 18. Close to the transmitter the ground wave is the dominant one, while at large distances the sky wave is the strongest. At some moderate distance the two waves are of approximately equal amplitude, and the resultant field obtained will depend primarily upon the phase relations of the ground and sky waves. This relative phase is dependent upon frequency, and may be substantially different for the various frequency components contained in a modulated wave. Furthermore, the ionosphere conditions will vary from moment to moment sufficiently to cause the relative phase to vary continually. As a consequence, the resultant signal in the region where ground and sky waves are of substantially equal intensity can be expected to exhibit severe selective fading, with accompanying distortion.

The distance from the transmitter where this region of bad distortion occurs will increase, as the earth's conductivity increases and the frequency is reduced, because these factors increase the strength of the ground wave. The distance will also increase the more the transmitting antenna concentrates its radiation along the horizontal, since such antenna directivity causes the ground wave to be stronger and at the same time reduces the strength of the high-angle radiation producing the part of the sky wave that returns to earth close to the transmitter. The effect of antenna height on the location of the region of high distortion is indicated by Fig. 19. It will be seen from this how satisfactory the 190° radiator is in this regard.

The position of this region is independent of transmitter power but will vary with ionosphere changes from hour to hour and from day to day. With high-power broadcast transmitters, the field strength in the high distortion region is adequate to give good service if it were not for this distortion. In such cases, the primary service area tends to be smaller at night than during the day.

Fig. 20 shows the manner in which the distance to the severe fading area varies over country and over sea water. The sky wave curve is interpolated from the 10 per cent. curve of Fig. 19. Sky waves from a distant transmitter always exhibit fading. (This should not be confused with the ground wave-sky wave fading mentioned above.) The fading is usually relatively slow, commonly taking some minutes to go from a maximum to a

/Fig. 19.

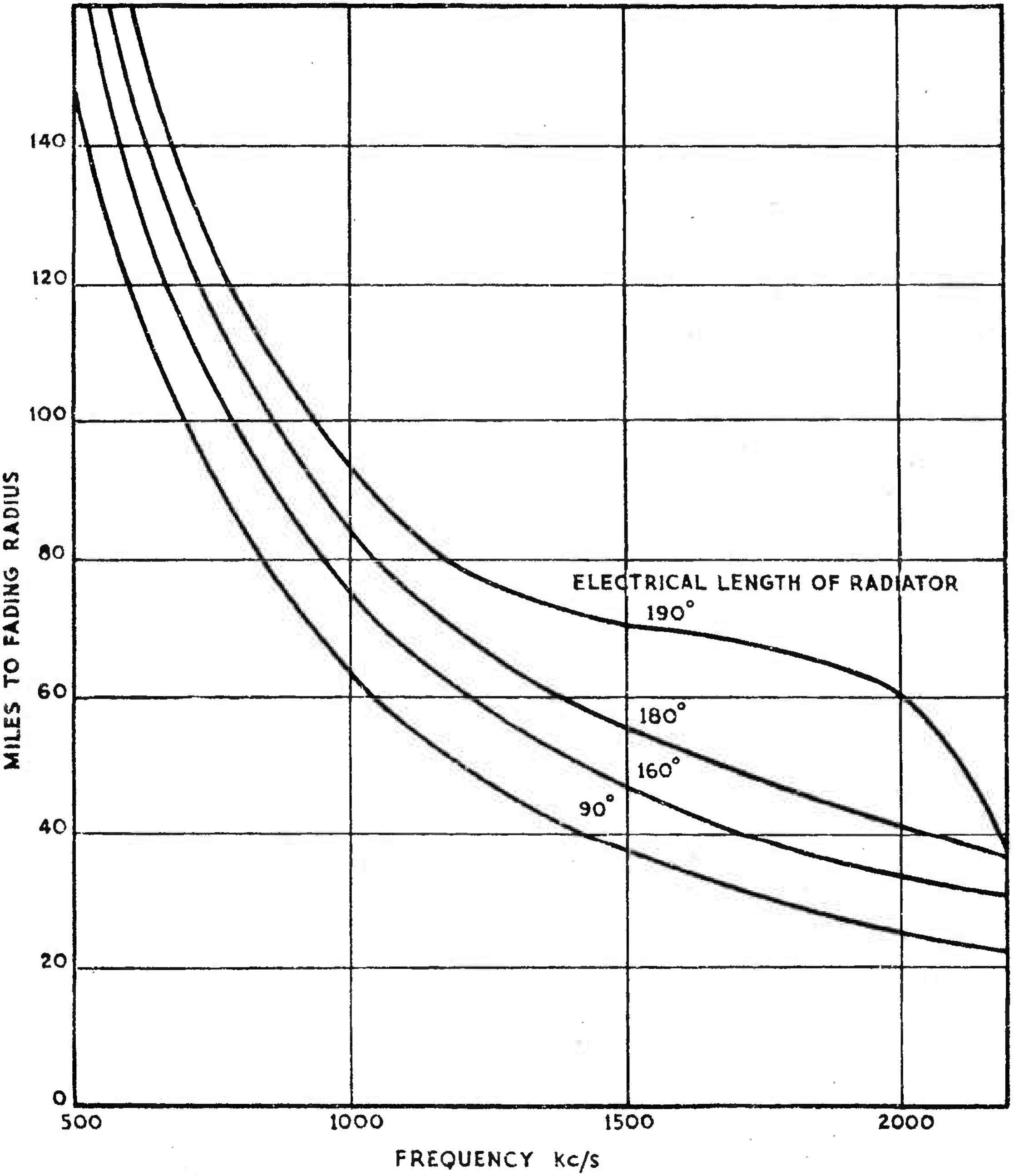

DISTANCE TO HIGH-DISTORTION FADING AREAS FOR SEVERAL TYPES OF ANTENNAS. (INDEPENDENT OF POWER).

FIG. 19.

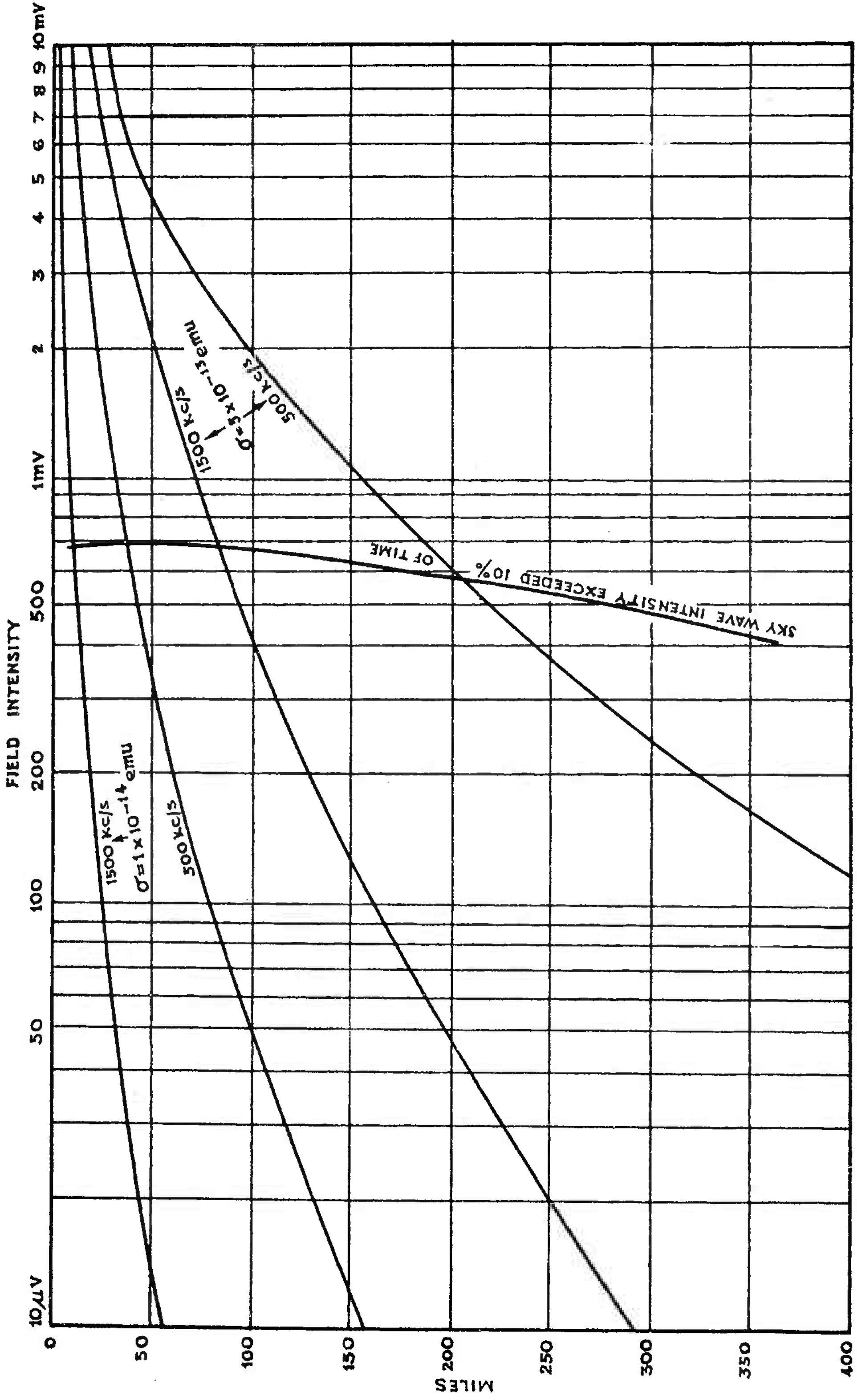

FIG. 20. VARIATION OF DISTANCE TO SEVERE FADING AREAS FOR A TRANSMITTER OF 1 KILOWATT WITH AN INVERSE FIELD OF 250 mV/METRES AT 1 MILE.

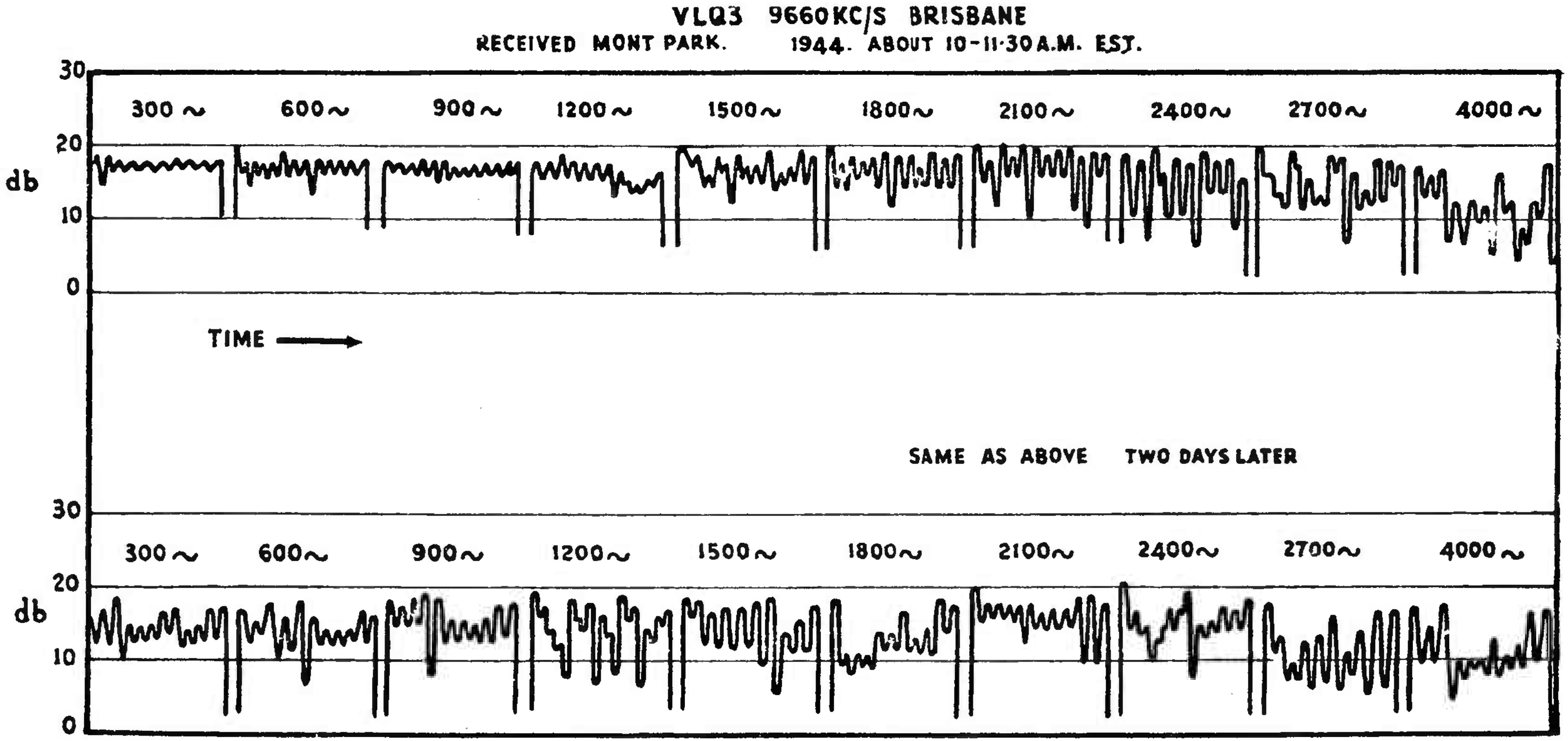

ILLUSTRATING SELECTIVE FADING.

The transmitter was modulated with the frequencies shown for $\frac{1}{2}$ minute periods with a short break while changing frequency. Modulation depth was 90 per cent.

FIG. 21.

minimum intensity, although in some instances it may be more rapid. This fading is the result of interference between waves that have travelled slightly different paths in the ionosphere. The fading is sensitive to frequency, the result being that with a modulated wave the carrier and the various sideband frequencies do not necessarily fade in and out together. This is termed "selective fading" and introduces distortion in the received wave, which is particularly great when the carrier wave fades to a small amplitude in proportion to the side bands. Fig. 21 illustrates selective fading on two different days. The intervals between the frequencies are short enough to admit considering the fading as taking place simultaneously. This shows how distortion will arise due to the different periods and depths of the fading with each frequency, since a modulated wave rarely contains only one frequency at a time.

5. TEST QUESTIONS.

1. Explain the following terms - Radiation Field, Induction Field, Wave Field.

2. What is the reason for fading as experienced with signals in the medium wave band (550-1,500 kc/s)?

3. Define the following terms and state their relationship -

   (i) Wavelength.
   (ii) Frequency.
   (iii) Velocity of propagation.

   What would be the frequency of a radio station having a wavelength of 384 metres?

4. Attenuation of a radio wave is due to many causes. Discuss three of these causes.

5. How does ground conductivity affect the propagation of radio waves?

END OF PAPER.

COMMONWEALTH OF AUSTRALIA.

Chief Engineer's Branch,
Postmaster-General's Department,
Treasury Gardens,
Melbourne, C.2.

COURSE OF TECHNICAL INSTRUCTION.

RADIO II. PAPER NO. 2.
PAGE 1.

AERIALS AND RADIATORS.

CONTENTS:

---

1. INTRODUCTION.

1.1 The transmission and reception of electromagnetic waves used for radio communication are accomplished by radiators and collectors exposed in space, and are commonly termed Antennae or Aerials. An aerial is a device composed of a system of one or more linear conductors, usually of large electrical dimensions (from a fraction to several wavelengths) which is used to couple a high-frequency A.C. generator or receiver to space. Thus, it is necessary to obtain a circuit which will not confine the useful fields to the immediate vicinity of the coil and condenser constituting the closed oscillatory circuit, where it would be absorbed. On the other hand, it is found that an open oscillatory circuit, such as capacitive or resistive aerials which have their inductance and/or capacitance distributed over a large area, will radiate a large proportion of the energy flowing in these. Therein is found the chief distinction between radio and wire propagation. In Radio it is required that as much energy as possible be radiated from the circuit. In wire propagation the aim is to prevent radiation from the lines to avoid cross-talk, etc.

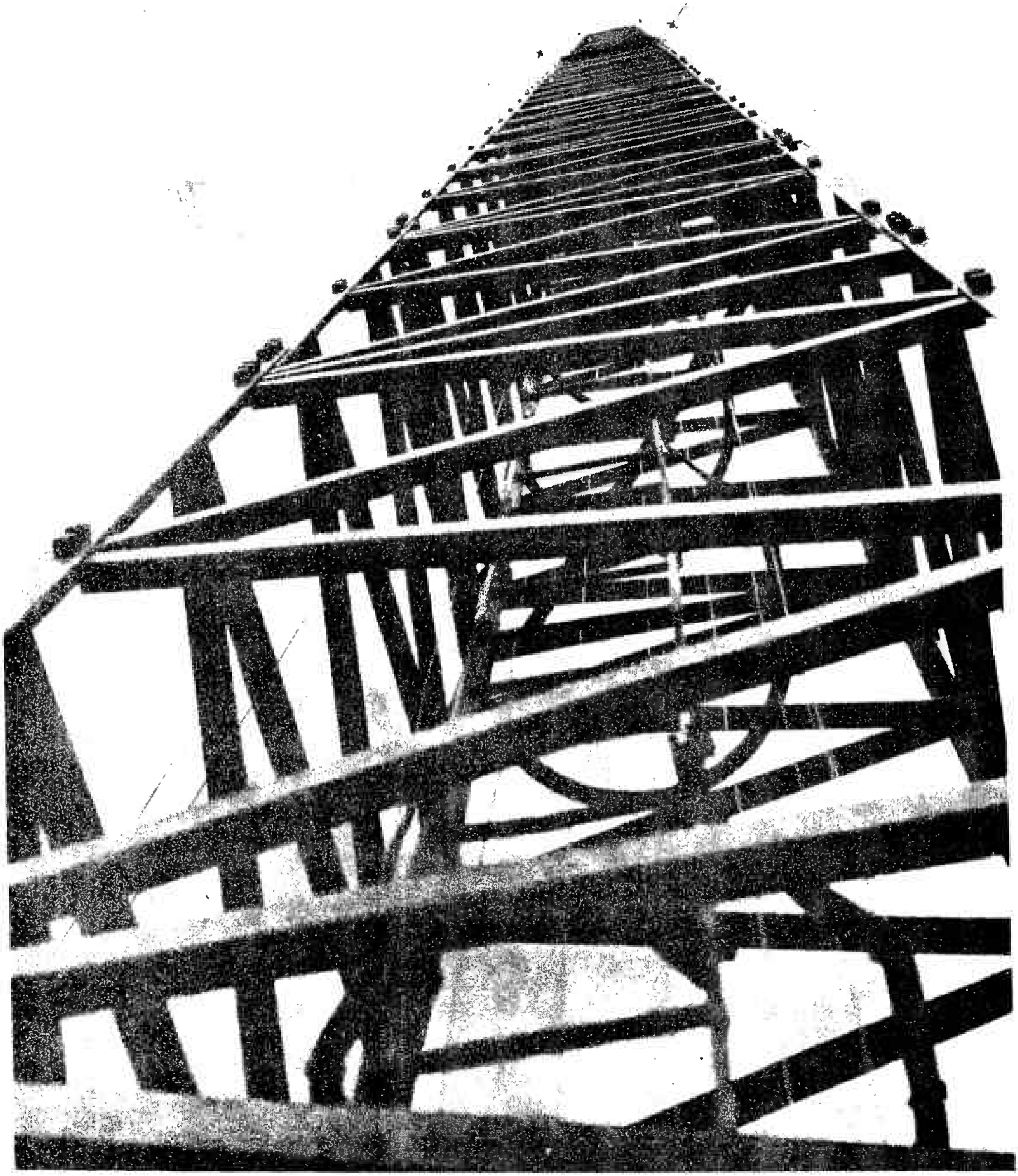

LOOKING UP THE MAST OF A RADIO STATION.

The principles of propagation of radio are dealt with in Paper No. 1.

Radiation of energy takes place from linear conductors which are electrically unbalanced. When it is desired to prevent radiation, two parallel conductors are placed very close together electrically, and equal and opposite charges are distributed identically along the conductors. To produce radiation, the spacing between conductors is increased and the balance of charges upset more and more. The ultimate in this direction is that of the familiar simple aerial, a single straight wire which is completely unbalanced.

2. CURRENT AND POTENTIAL DISTRIBUTION IN STRAIGHT WIRES.

2.1 Radiation is basically dependent upon the current and potential distribution in the oscillating wire comprising the aerial. These distributions in turn are dependent upon the manner in which charges are propagated in the wire under various conditions of excitation by a transmitter. If an uncharged wire is connected to a source of high-frequency energy, charges move from the generator into the wire, travel along the wire and, after an interval of time, depending upon the length of the wire and the velocity of propagation of the charges, arrive at the distant end. If the end of the wire is an open circuit, as most aerials are, there will be a transformation of energy at the end which causes the potential there to double and the current to become zero. The high potential at the end, due to the accumulation of charges which continue to arrive from the generator, causes waves of energy to be propagated from the open end back to the generator.

When the wire is "tuned," the reflected energy arrives at the generator when it is reversing its polarity, in which case the energy of the reflected wave is absorbed by the generator and is not re-reflected. Thus, in the typical aerial, the characteristic current and potential distribution is the result of a simple reflection - a wave of charges moving from the generator towards the end of the wire, and the reflection from the end back to the generator.

/An

An aerial may be represented by a series of constants, as shown in Fig. 1, R being the resistance of the wire, C being the capacitance of the wire to earth, and L the inductance of the wire. These constants will vary according to the length of wire, its distance from the earth and the plane of the wire relative to the earth's surface.

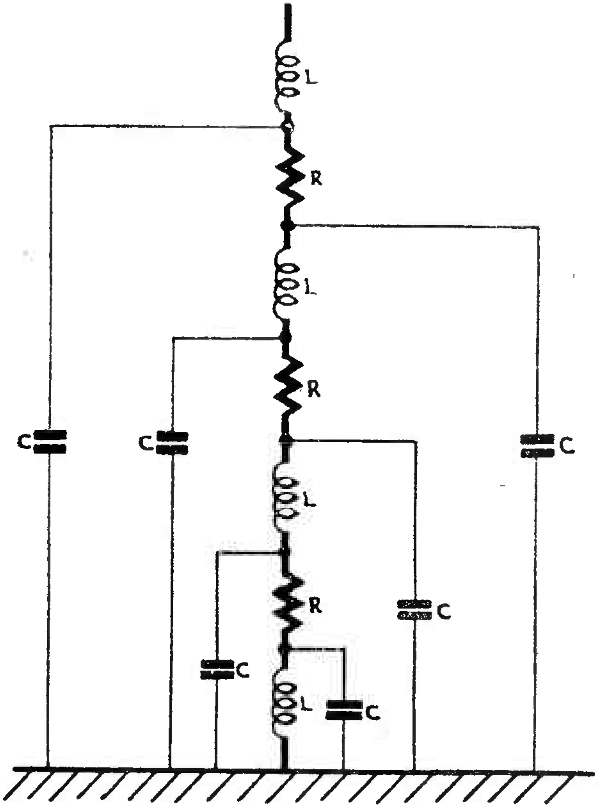

TYPICAL AERIAL CONSTANTS.

FIG. 1.

Thus, different current and potential distributions are present with different lengths and heights of aerials. Radiation phenomena are usually studied in terms of the electromagnetic field, which is associated with aerial currents. Thus, the basis of reference is usually the current distribution in the aerial, and this varies with the length of the wire. It is customary to refer to this length in relation to its ratio to the wavelength of the transmitted wave, and this brings us to the basic aerial.

/Dual

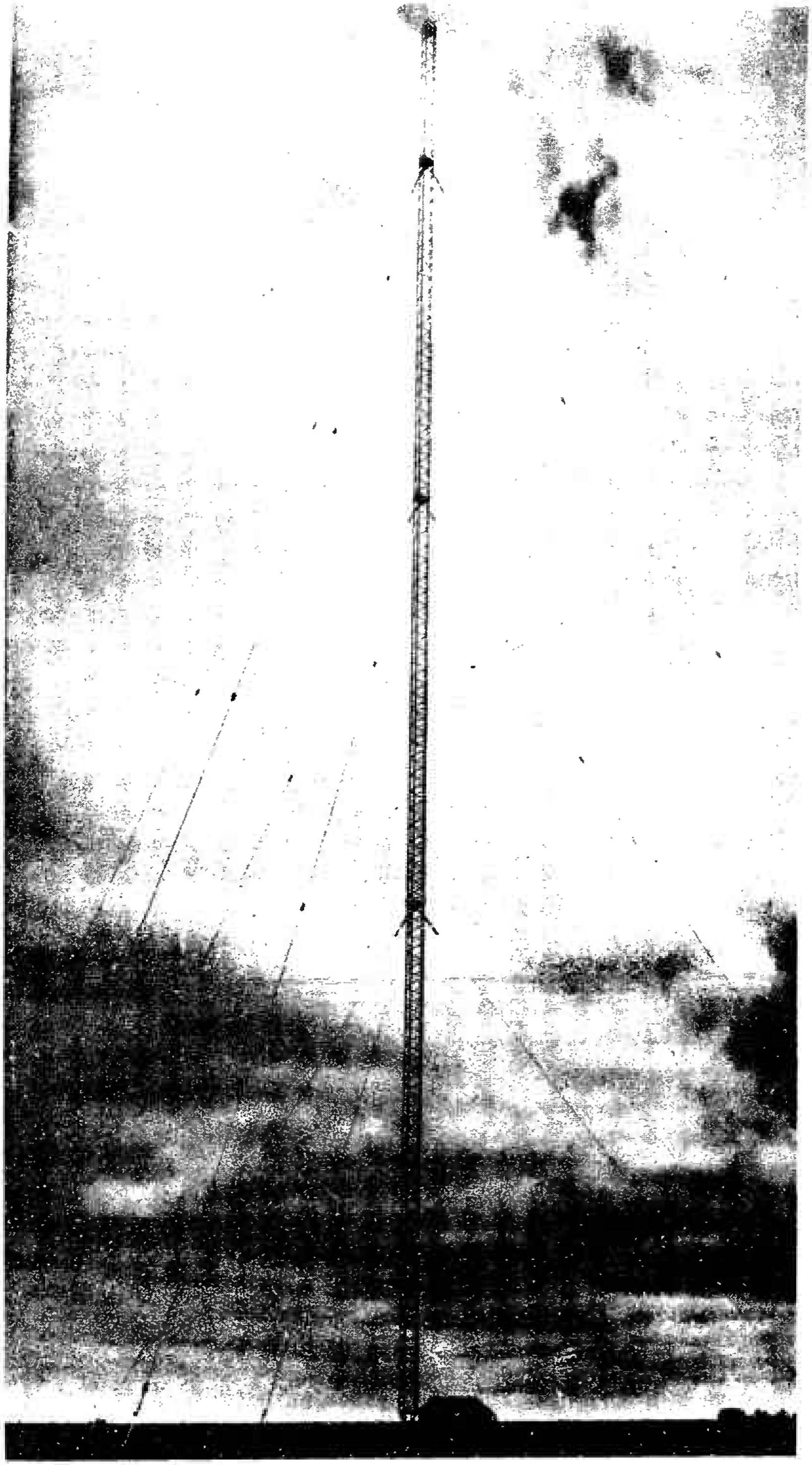

DUAL-FREQUENCY RADIATOR 3LO/3AR - 2FC/2BL.
(See also page 6 and Fig. 11b).

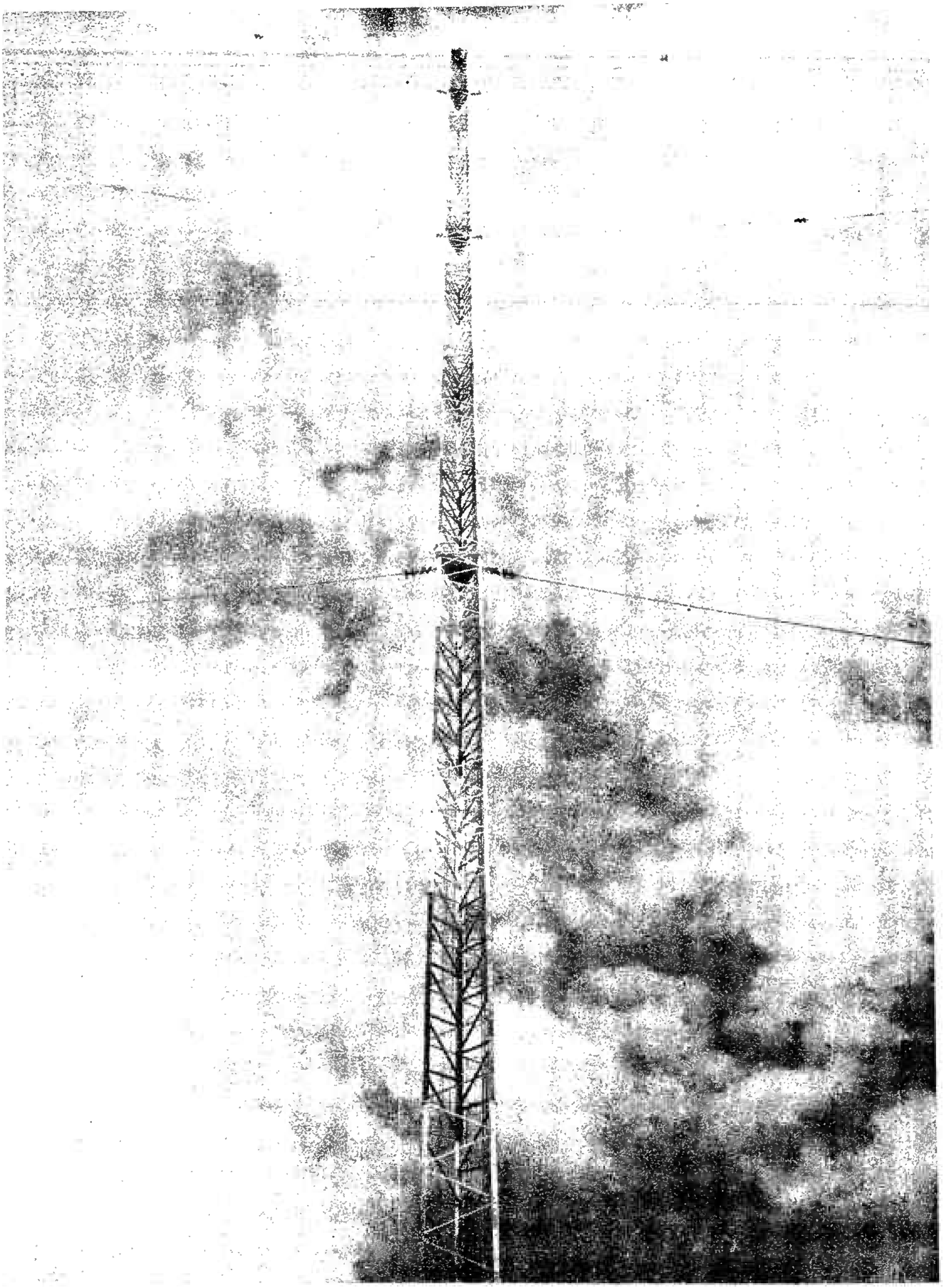

ELECTRIC FINGER IN THE CLOUDS.
TOP OF 3LO/AR RADIATOR.

3. BASIC AERIAL.

3.1 The shortest length of wire which will resonate to a given frequency is one which is just long enough to permit an electric charge to travel from one end to the other and back again in the time of one radio frequency cycle. It is apparent, then, that a wire one half wavelength long will meet this requirement, since the charge will travel to the end during one half-cycle and return during the following half-cycle (one cycle equalling one wavelength). Fig. 2 illustrates the conventional representation of the current and voltage distribution on a half-wave wire. It will be noticed that the current and voltage curves are 90° out of phase, which corresponds to the conditions associated with an open-circuited 2-wire telephone line. These curves actually exist as standing waves when the aerial is excited, and may be observed by measuring the current at different points along the wire or using a neon lamp to indicate voltage maxima and minima. A maximum point is termed an "antinode" and a minimum point is termed a "node."

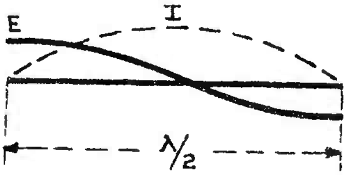

ELEMENTARY HALF-WAVE AERIAL
SHOWING CURRENT AND VOLTAGE
DISTRIBUTION.

FIG. 2.

It will be noticed that a half-wave aerial is characterised by voltage maxima (antinodes) at the ends of the wire, with a current antinode at the centre. The impedance, therefore, is a minimum where the current is a maximum, and vice versa. That is, the impedance is a minimum at the centre, and for a half-wave aerial averages about 73 ohms, while at the ends it is of the order of 3,000 ohms. It is useful to remember this, as it enables lines of different impedances to be matched to the aerial by suitable spacing from the centre.

3.2 Electrical Length. Since an aerial possesses both inductance and capacity which will affect the electrical characteristics of the wire, the "physical" length of the wire is always shorter than the actual length in metres of a half-wave. Perhaps this is easier to visualise by considering the time taken for a charge to travel and return, as mentioned previously. The effect of the aerial constants is to reduce the velocity of the wave slightly (the figure of 300×10^6 metres per second being in free space), therefore it would take the charge longer to travel to the end and return (with the lower velocity), and this would not be accomplished in the time of one radio frequency cycle. Shortening the wire, however, would enable this to be done, and the "physical" length is usually taken as about 95 per cent. of the required half-wavelength.

/Bottom

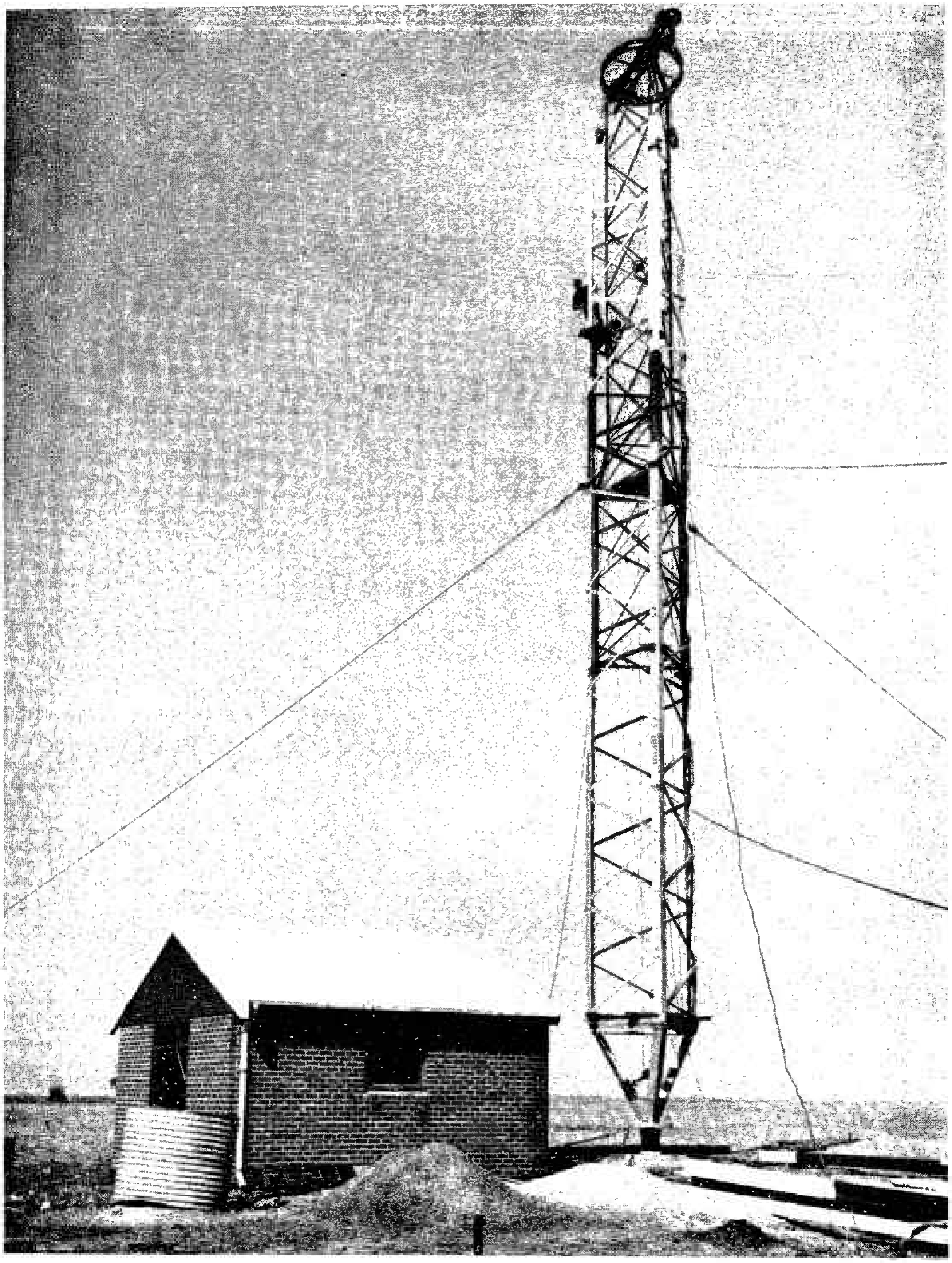

BOTTOM PART OF 3LO/AR RADIATOR.
(Picture taken during erection of mast).

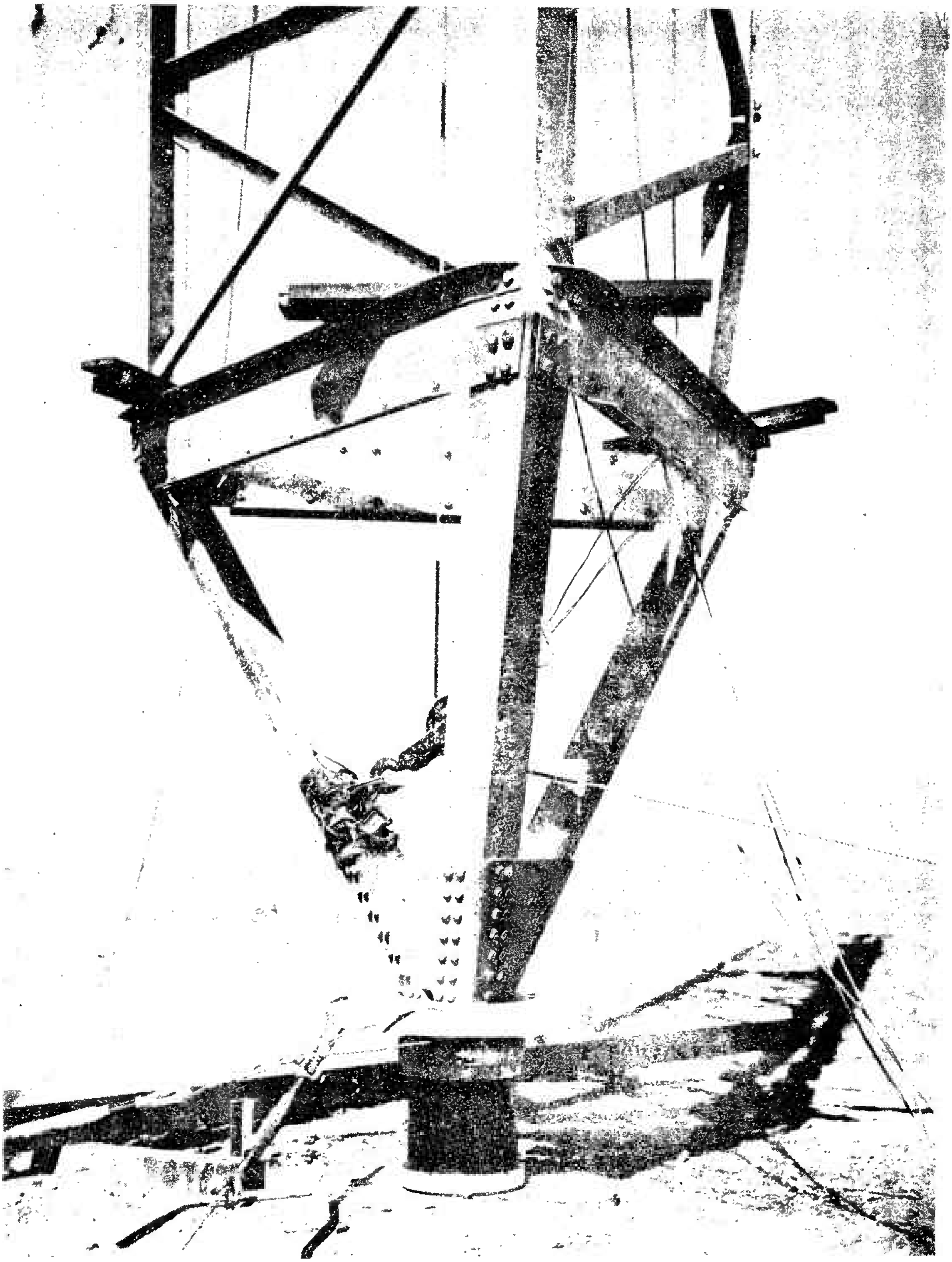

BASE OF 3LO/AR RADIATOR SHOWING THE INSULATOR ON WHICH IT RESTS.
(Picture taken during erection of mast.)

Approximate formula for length of half-wave aerial -

$$\ell \text{ (feet)} = \frac{468}{\text{freq.}} \text{ (Mc/s)}.$$

3.3 Radiation Pattern. A horizontal half-wave aerial radiates maximum energy broadside to its length, and has a certain broad directivity. Fig. 3a shows a plan of the pattern, and Fig. 3b the pattern looking at the end of the aerial.

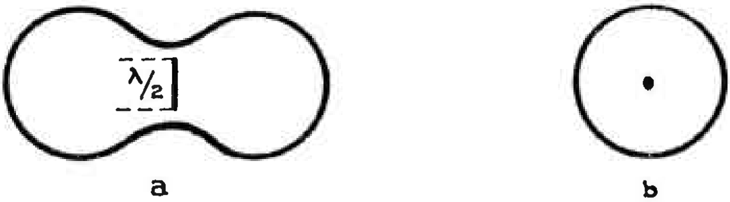

Sectional Plan of Broadside Radiation of ½ Wave Aerial.

Looking at End of Aerial.

FIG. 3. RADIATION PATTERN.

One of the lobes can be reduced by using a reflector spaced a quarter wavelength behind the aerial, which would give it a unidirectional pattern. It is not usual, however, to use a single half-wave aerial for short-wave broadcasting, but to use arrays of these in vertical and horizontal combinations. By the use of arrays the directive patterns may be sharpened and the gain increased. (A more detailed reference will be found later.)

It was stated before that the current distribution depended on the electrical length of the aerial. Fig. 4 shows this distribution for several lengths, the distribution for intermediate values will vary according to their electrical length. These lengths are sometimes referred to in electrical degrees, that is, a quarter wavelength = 90°, a half wavelength = 180°, etc. Reference to Fig. 4 will explain this. In Fig. 4a, the current distribution curve is a quarter of a full cycle, that is, $\frac{360^\circ}{4} = 90^\circ$, in Fig. 4d this curve is a complete cycle $\therefore \ell = 360^\circ$.

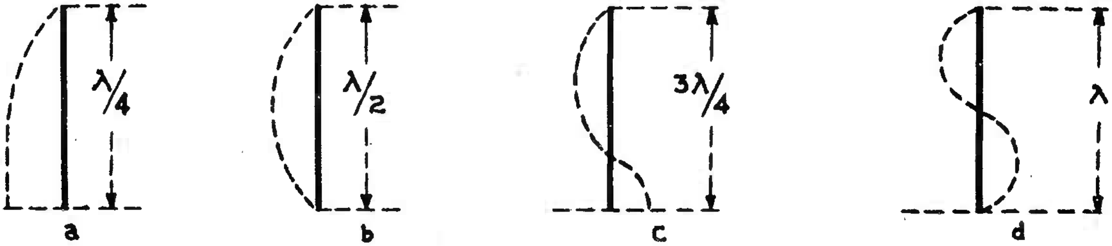

CURRENT DISTRIBUTION FOR VARIOUS LENGTHS OF AERIAL.

FIG. 4.

4. RADIATION OF ELECTROMAGNETIC WAVES FROM AERIAL.

4.1 Effective application of the abovementioned principles to practical communication problems makes use of special radiating characteristics, made possible by the disposition of radiators, their length, current distribution, current phase and amplitude relations. All radiation control, such as gain, directivity, etc., is due to wave interference, and the space characteristics of aerial and arrays result from interferences between the fields produced by all the infinitesimal portions of all the radiators when currents flow in them. For grounded aerials, interferences result from wave reflections from the ground (image radiations) and, for this reason, the electrical constants of the earth have an important influence on the radiation patterns.

4.2 Radiation in Free Space. First consider a straight wire in free space (the ideal conditions). Fig. 5 shows polar diagrams of radiation for straight wires having the current distribution shown.

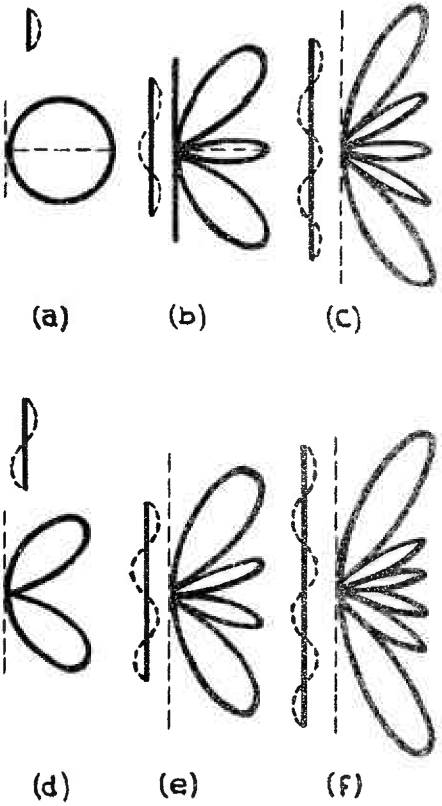

(a) 1/2 wavelength aerial (180°) or operating at fundamental or 1st harmonic.

(b) 3/2 wavelength aerial (540°) or operating at fundamental or 3rd harmonic.

(c) 5/2 wavelength aerial (900°) or operating at fundamental or 5th harmonic.

(d) Full wavelength aerial (360°) or operating at fundamental or 2nd harmonic.

(e) 2 wavelengths aerial (720°) or operating at fundamental or 4th harmonic.

(f) 3 wavelengths aerial (1080°) or operating at fundamental or 6th harmonic.

FREE SPACE RADIATION PATTERNS OF WIRE FOR VARIOUS CURRENT DISTRIBUTIONS.

FIG. 5.

These lobes are shown in cross-section but actually continue right around the wire like the rim round a wheel, and are, as shown, broadside to the wire. Looking end on to the wire, the pattern is as in Fig. 3b. It will be noticed that the wires of even and odd wavelengths have different patterns, this effect is made use of later. The formation of these patterns could be achieved by applying high frequency currents as follows -

Suppose a frequency "f" produced the pattern of Fig. 5a (for example, 5 Mc/s),

then 3f would produce Fig. 5b (15 Mc/s)
5f would produce Fig. 5c (25 Mc/s)
2f would produce Fig. 5d (10 Mc/s)
4f would produce Fig. 5e (20 Mc/s)
6f would produce Fig. 5f (30 Mc/s)

It will be seen then that a $\lambda/2$ aerial designed for 5 Mc/s could be used for operation at integral multiples of 5 Mc/s. This principle is useful for amateur stations which have 7, 14, 28 Mc/s bands allotted for their use.

4.3 Effect of Earth. Since it is not practicable to have an aerial in free space, broadcast aerials are usually close enough to the ground for their effects to be noticeable, and it is necessary, therefore, to consider these effects on the radiation characteristics.

When an aerial is near the ground, energy radiated towards the earth is reflected, as shown in Fig. 6a, so that the total field in any direction represents the vector sum of a direct and a reflected wave (not to be confused with the direct and indirect waves, that is, ground and sky waves).

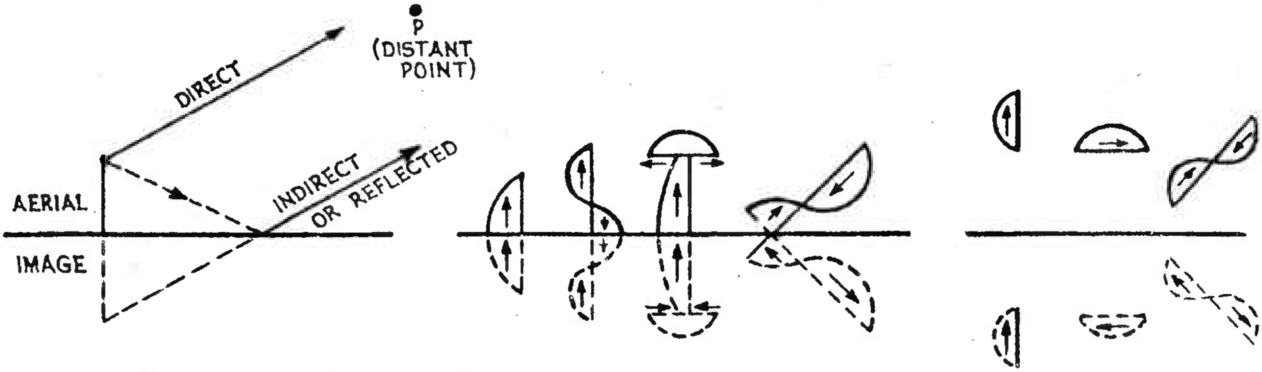

(a) Effect of Earth (b) Grounded Aerial Images (c) Ungrounded Aerial Images.

FIG. 6. AERIAL IMAGES.

For purposes of calculation, it is convenient to consider that the reflected wave is generated not by reflection but rather by a suitable image aerial located below the surface of the ground. This image aerial has a physical configuration that is the mirror image of the actual aerial, as illustrated in Fig. 6b. Fig. 6c shows the image of an ungrounded aerial.

The fields produced by the joint action of the actual aerial and its image are the same as exist in the space above the earth, with the actual aerial in the presence of a perfect ground. Referring to Fig. 6a, it will be seen that the height of the aerial above earth will affect the length of the path of the reflected ray, and, consequently, the phase difference between the two rays. Since the radiated wave is the vector sum of the two rays, it follows that for differing aerial heights we will have different radiation patterns in the vertical plane.

Thus, the height of the aerial above earth can be varied to obtain radiation at desired vertical angles, and this is a point that has considerable application in practice. The intensity of the signal at a given angle may vary from zero to twice the signal due to the aerial without its image.

The type or nature of the ground will vary the magnitude of the reflected ray but, for most practical purposes, the earth may be considered as a perfect reflector of radio waves. Fig. 7 shows the radiation patterns of several vertical grounded aerials with the current distributions as shown.

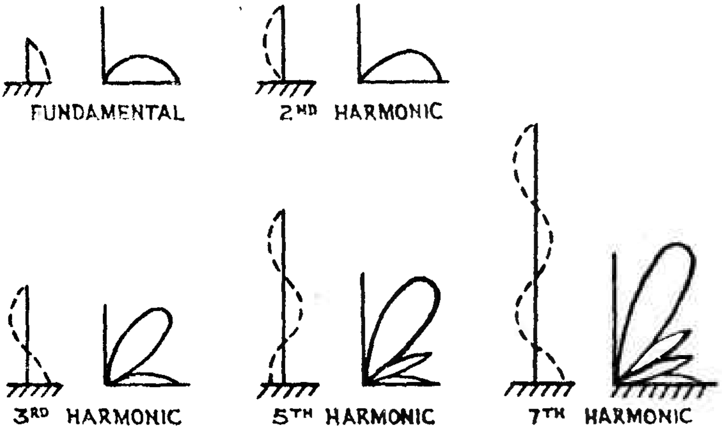

RADIATION PATTERNS OF GROUNDED VERTICAL AERIAL WITH THE CURRENT DISTRIBUTIONS SHOWN.

FIG. 7.

Aerial arrays will be discussed later, but, at this point, it is of interest to compare Fig. 7 with Fig. 8. In Fig. 8, the current distributed has been modified by phasing the successive dipole (half-wave) sections so that the current distribution is as shown in Fig. 8. The effect on the radiation pattern should be noted.

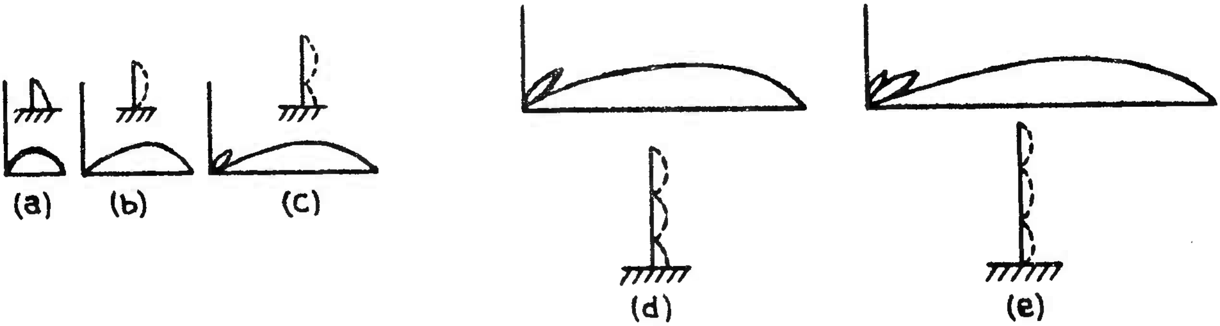

EFFECT OF PHASING THE CURRENTS IN SUCCESSIVE DIPOLE SECTIONS OF VERTICAL GROUNDED AERIAL.

FIG. 8.

The effect of the earth is noticeable, of course, on horizontal as well as vertical aerials, and Fig. 9 shows how the height above ground varies the radiation pattern of a horizontal half-wave aerial.

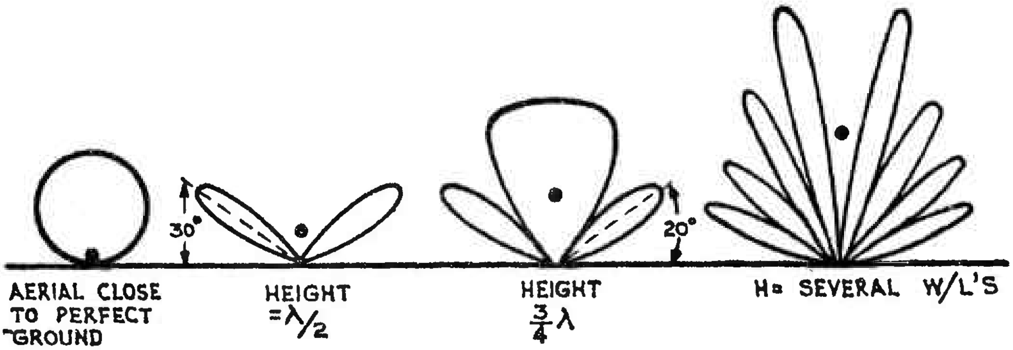

HOW THE PATTERN OF FIG. 3b IS MODIFIED BY THE HEIGHT OF A HORIZONTAL HALF-WAVE AERIAL ABOVE GROUND.

FIG. 9.

The requirements of aerials for medium and high frequency transmission differ, so each case will be considered separately.

/5.

5. BROADCAST AERIAL 550-2,000 kc/s (MEDIUM FREQUENCY BAND).

5.1 This service requires an aerial system that will radiate maximum energy at low angles to the horizon and a minimum at high angles, in order to reduce the intensity of the sky wave and so reduce the fading due to interaction of the two waves.

Early transmitting stations used relatively inefficient forms of aerials, such as "T", cage type, etc., but modern developments are in favour of what might be termed "oscillating towers." In this type of aerial or, more correctly, "radiator," the structure itself is the radiating element.

Broadcast aerials may be classified as follows -

(i) The high vertical single-wire aerial suspended from a triatic between self-supporting towers (widely spaced) and having a fundamental frequency lower than the operating frequency.

(ii) The high single-wire T aerial, similar to (i) but with a relatively short T flat top and operating above its fundamental frequency.

(iii) The guyed cantilever steel tower having a height somewhat greater than one-half wavelength, the tower itself forming the aerial conductor.

(iv) The self-supporting steel tower, from one-quarter to more than one-half wavelength, the tower being the aerial conductor.

(v) Directive arrays of two or more vertical elements, designed to improve radiation in specified directions or to reduce it in others to minimise interference.

Types (i), (ii) and (v) need no detailed treatment since their radiation patterns are similar for radiating towers of similar electrical heights.

Fig. 10 shows the vertical radiation patterns of grounded vertical aerials for different electrical lengths, and, from this figure, it will be seen that an aerial having an effective height of less than 225° (0.625λ) but greater than 180° (0.50λ) should have good radiation characteristics.

The $\lambda/4$ has undesirable radiation at high angles such as T1, T2, while the 0.625λ (225°) has an undesirable lobe at a high angle.

/Fig. 10

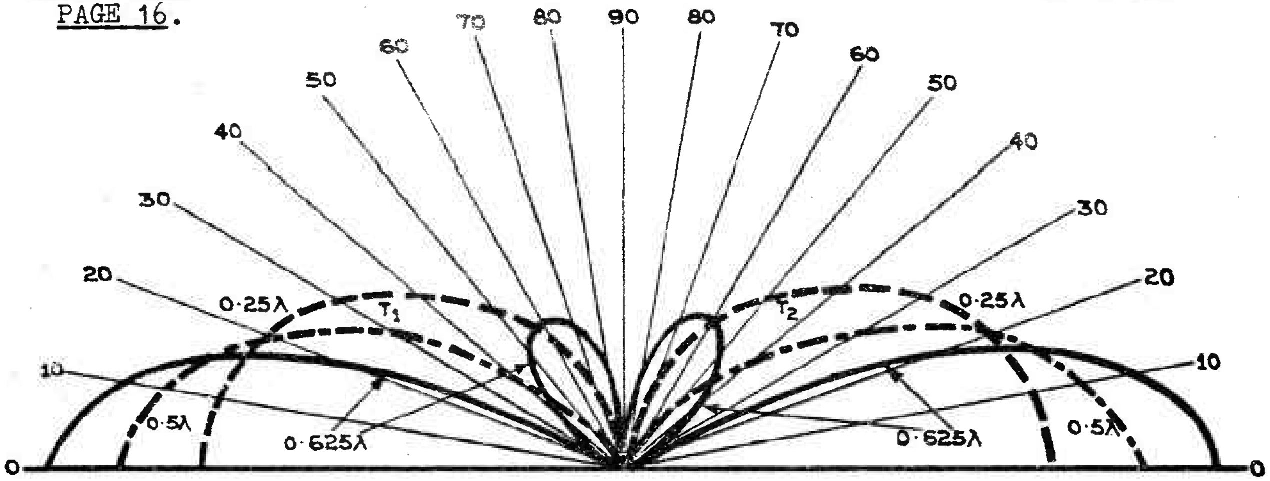

RADIATION PATTERNS (VERTICAL PLANE) FOR GROUNDED VERTICAL AERIALS OF 0.25λ, 0.5λ AND 0.625λ HEIGHT (90°, 180°, 225°).

FIG. 10.

The best radiation pattern obtainable from a linear vertical radiator is that produced by a 190° radiator as shown in Fig. 11a.

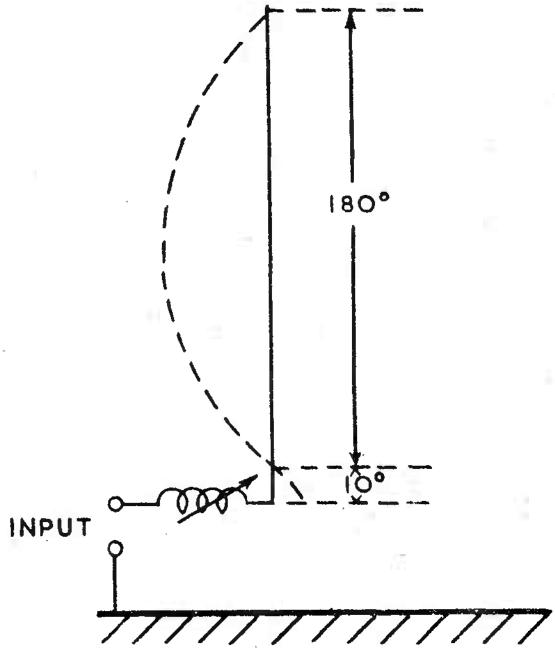

CURRENT DISTRIBUTION IN A 190° RADIATOR.

FIG. 11a.

The usual method of feeding such a radiator is through a series inductor as shown. The value of this inductor is adjusted to tune out the reactance of the aerial and the impedance at the input terminals is then a pure resistance. A matching network is used to match this resistance to the line impedance. Radiation from the inductor is negligible compared with that from the radiator and the current distribution in the aerial is similar to that in an open-circuited transmission line 190° long.

Fig. 11b is a sketch of this type of radiator, and a picture of the radiator is shown on Page 5.

/ Fig. 11b.

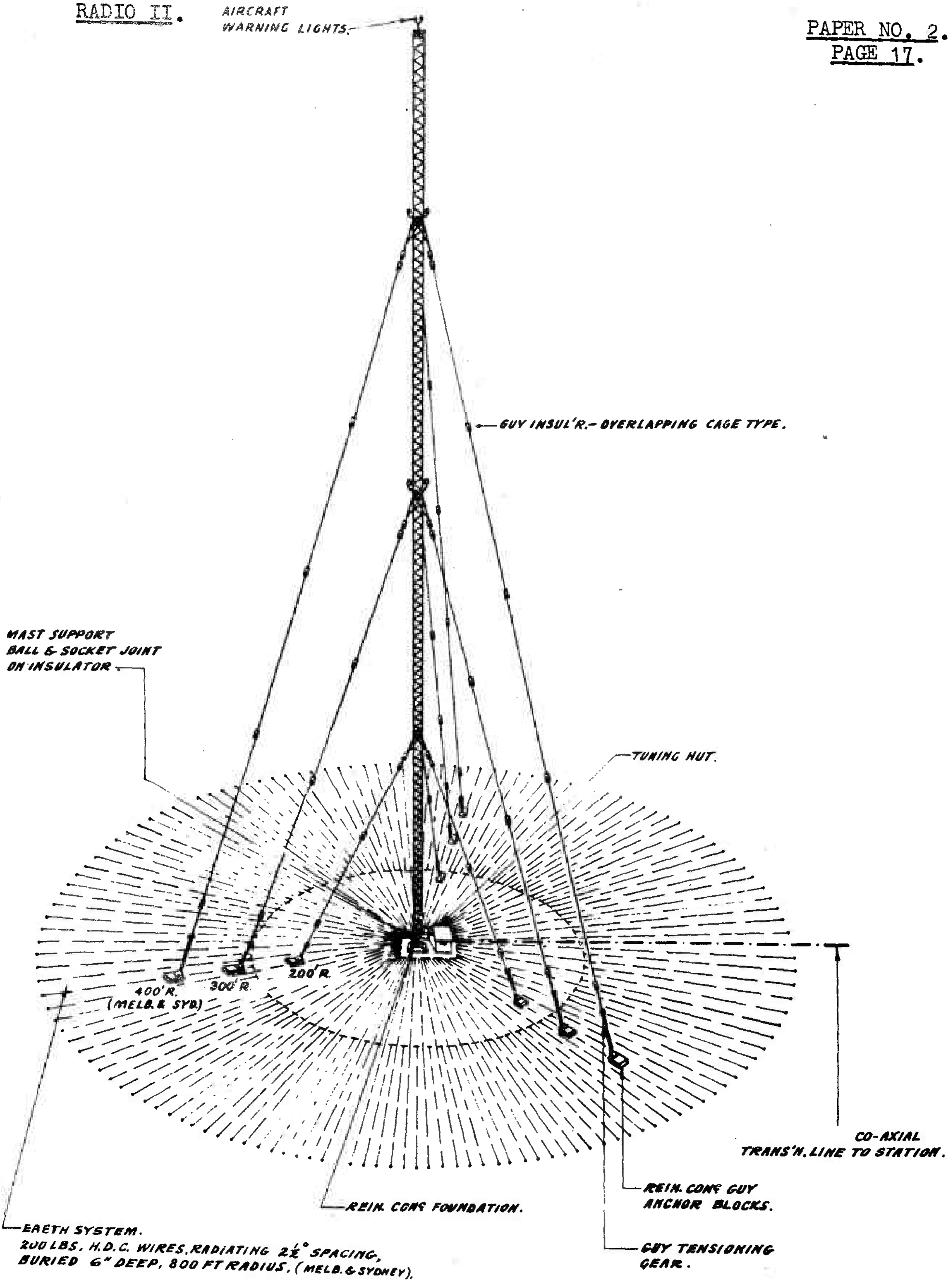

FIG. 11b. 190° AERIAL.

The radiator usually consists of a fabricated steel tower and is insulated from the ground. It may be made self-supporting to heights of about 200 feet, but over that it is guyed. When the tower is to be used as a half-wave radiator, it is especially desirable that its capacity to earth be as low as possible. The tower rests on an insulator (see pages 8 and 9) since it is earthed only through inductance L (Fig. 11a).

The effective height of the radiator may be obtained by having a tower of the correct height, or a shorter tower (see Fig. 11c) with "top loading," usually an inductance, to give it the required electrical height. Both types are in use at National Broadcasting Stations, and also a later development whereby the one tower radiates two frequencies (for example, 3AR/3LO, 2FC/2BL).

By tuning the radiator to resonance with the frequency to be radiated the impedance of the system is reduced to a minimum, and a relatively small applied voltage produces a large current and hence a high radiated energy.

The over-all efficiency of the aerial may be greatly improved by laying down a network earth system. In the case of the "oscillating" tower, this usually consists of a system of base copper wires radiating from a main bus located near the tower base. It has been found that, in the case of a half-wave radiator, ground losses increase rapidly to a maximum at a distance of about 0.35λ, decreasing thereafter. This would indicate that the ground system should extend for a distance of at least a quarter wave from radiator. (Fig. 11c illustrates a typical broadcast radiator of the top loaded type.)

The importance of the ground terminal for a radiating system cannot be over-emphasised. If there existed such a thing as a perfectly conducting earth, any sort of a firm connection to the earth would suffice for a terminal. Soils, and even salt-water marsh, at best are poor conductors at radio frequencies. The ground system used with an aerial must make the best possible contact with the existing ground substances found at a station site. The major function of the ground system is to act as a reflecting surface for the downcoming waves from the aerial, and, for this purpose, it must extend outward for a considerable distance. The more nearly a system of ground wires approaches a continuous metallic sheet of great extent, the better it is as a ground system.

Table 1 gives some representative aerial data.

/Fig. 11c.

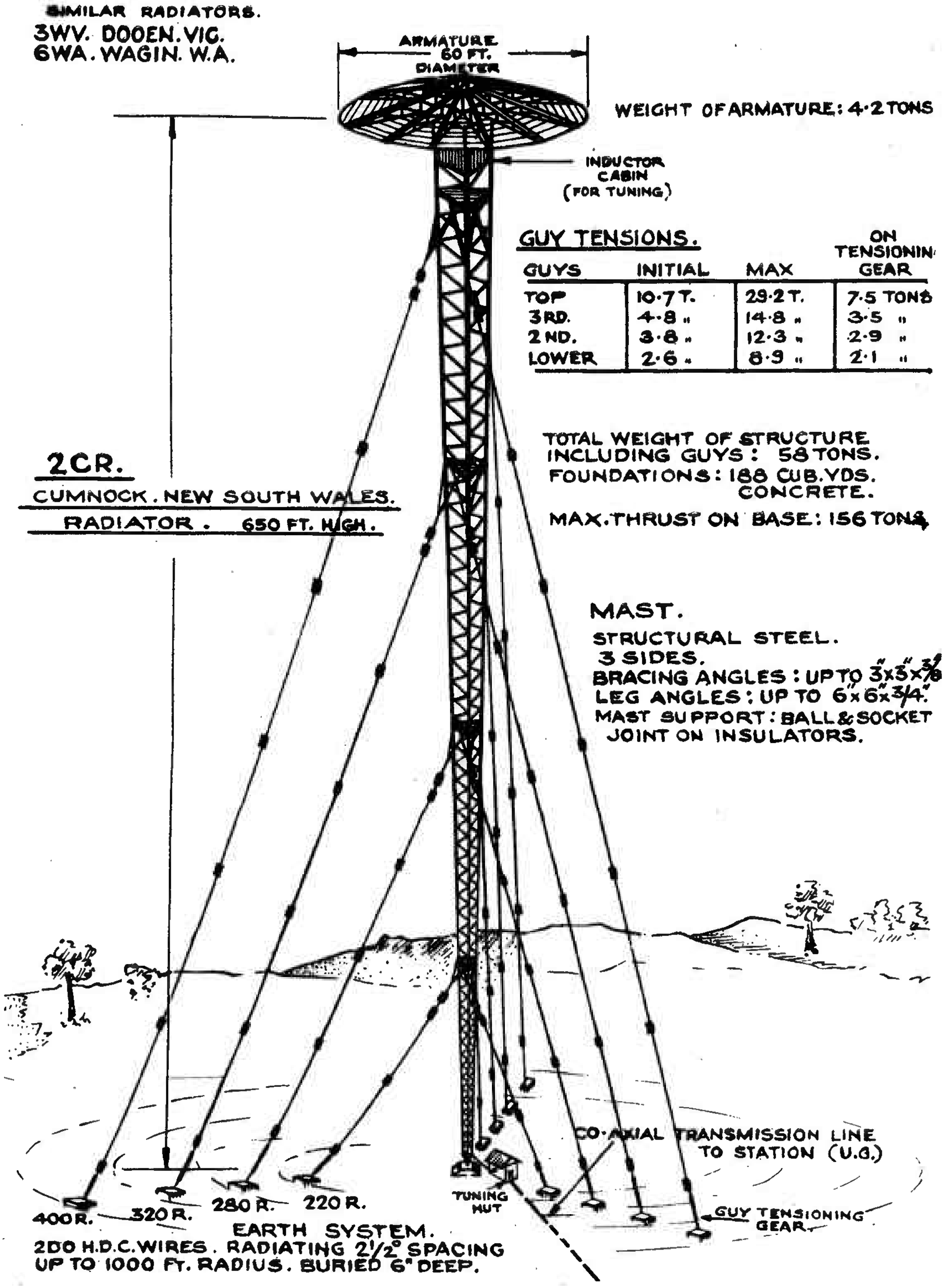

GUY TENSIONS.

GUYS	INITIAL	MAX	ON TENSIONIN GEAR
TOP	10·7 T.	29·2 T.	7·5 TONS
3RD.	4·8 "	14·8 "	3·5 "
2ND.	3·8 "	12·3 "	2·9 "
LOWER	2·6 "	8·9 "	2·1 "

FIG. 11c. TOP LOADED BROADCAST AERIAL.

Frequencies	Low Cost Installation	Efficient Installation
1,000-1,500 kc/s		
(i) Form of aerial	T	Self-supporting oscillating tower.
(ii) Height	1/8-1/4 λ	1/4-1/2 wavelength.
(iii) Land required	1 acre	1½ acres.*
750-1,000 kc/s		
(i) Form of aerial	T	Guyed oscillating tower.
(ii) Height	1/8-1/4 λ	1/4-1/2 wavelength.
(iii) Land required	3 acres	5 acres.*
550-750 kc/s		
(i) Form of aerial	T	Guyed oscillating tower.
(ii) Height	1/8-1/4 λ	1/4-1/2 wavelength.
(iii) Land required	15 acres	25 acres.*

*Dictated mainly by ground system.

TABLE 1.

5.2 Counterpoise. Where a buried ground system cannot be employed, a counterpoise is frequently required as a high-capacity ground terminal. In general, the same considerations which apply to radial ground systems apply also to counterpoises. Where extremely high electric fields exist near the base of a radiator, a small counterpoise will help to reduce the potential gradients in imperfect dielectrics, such as soil or wood, and thus decrease losses. Counterpoises are also of great use where the aerial must be located on the roof of a building.

5.3 Coupling and Feeder Circuits Used for Broadcasting. Aerials are either fed directly from the transmitter or at a distance from the transmitter by using some form of radio frequency transmission line. This latter practice is adopted, wherever possible, to minimise the distortion of the radiated signal which would result from the presence of the transmitter buildings, etc., near the aerial. Typical types of lines in use are listed in Table 2.

/Table 2.

Type	Approx. Characteristic Impedance Z_o.
4-wire open line with two opposite wires grounded.	235 ohms.
Concentric tubular lines.	70 "
2-wire open balanced line.	600 "
3-wire open balanced line (middle wire grounded).	600 "
4-wire balanced line.	315 "
1-wire open line with ground return.	500 "
6-wire four outer wires grounded, inner two are conductors.	190 "

TABLE 2.

Transmission lines require equipment, suitably adjusted, to be capable of transforming the aerial impedance to the characteristic impedance of the line. A line, terminated in its characteristic impedance, Z_o, provides a unidirectional flow of power from the transmitter to the aerial without the losses due to reflections of energy in the system. Additional information on transmission lines will be found in a subsequent Paper.

5.4 Impedance Matching. Impedance matching will be discussed later in more detail, but it will be appreciated it is important that the aerial should be the only source of radiation. The lines connecting the aerial to the transmitter should not exhibit any standing waves, which represent wasted energy. These standing waves will be present should any mismatches of impedance occur, and the importance of correct matching cannot be overstressed, especially in the case of high power transmitters.

Self-Impedance of an Aerial. The impedance of an aerial, as seen from the point where power is introduced, is usually complex. The resistance is made up of the radiation resistance, the conductor resistance and the ground resistance. The reactive component is determined by the characteristic impedance of the aerial, the electrical length and the influence of any loading. Distributed capacitance, due to base insulators,

/protective

protective gaps, drain coils, etc., also affect the aerial impedance value.

At the resonant frequency (f_o) of the aerial its impedance approaches a pure resistance, but, when the frequency of the induced e.m.f. is increased above f_o, the aerial reactance becomes inductive and increases in value as the frequency approaches $2f_o$. Just before $2f_o$ the aerial reactance is inductive and very large; just beyond $2f_o$ it is capacitive and very large. As the frequency is increased towards $3f_o$ the capacitive reactance decreases and, at the frequency of $3f_o$ the aerial reactance becomes zero. The variation of aerial reactance with frequency of induced e.m.f. is shown by the curves of Fig. 12.

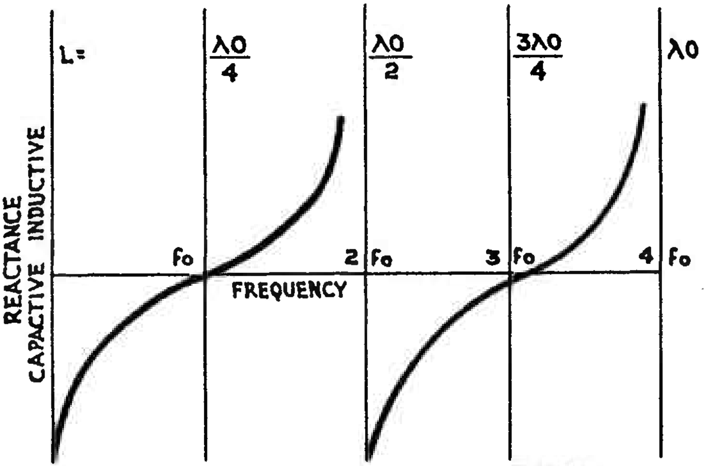

VARIATION OF AERIAL REACTANCE WITH FREQUENCY OF INDUCED E.M.F.

FIG. 12.

At frequencies f_o, $3f_o$, $5f_o$, etc., whenever the length of the aerial is an odd number of quarter wavelengths, the aerial behaves as a resonant circuit of small resistance. At frequencies $2f_o$, $4f_o$, $6f_o$, etc., that is, whenever the length of the aerial is an even number of quarter wavelengths, the aerial behaves as a resonant circuit with a large resistance. Note that, when the length of the aerial is an odd number of quarter wavelengths, the bottom of the aerial is a point of maximum current and minimum voltage, whereas the opposite is the case when the aerial is an even number of quarter wavelengths long.

5.5 Standing Waves. When the current and voltage along a wire vary in the manner indicated in Figs. 11a and 13, the wire is said to carry "standing waves" of current and voltage. At a point where the current is a maximum, it will be noticed that voltage is a minimum; conversely, a point of maximum voltage is a point of minimum current. A point of minimum current is a node of current; a point of maximum current is an antinode of current. The terms node and antinode are also used to indicate points of minimum and maximum voltage. Notice that the distant end of an aerial is always a node of current and an antinode of voltage.

/Current

Current distributions of the type shown in Fig. 13 are sometimes encountered in short-wave aerial systems. In systems other than short-wave systems, it is customary to make the dimensions of a transmitting aerial of such a value that its natural frequency is well above the highest frequency it is required to transmit, that is, the aerial's resonant wavelength is smaller than the smallest wavelength that it has to transmit. Now, at frequencies below its natural frequency (wavelengths above its natural wavelength), an aerial behaves as a capacitive reactance (see Fig. 12). Hence, if an aerial has a resonant frequency of, say, 1,500 kc/s (200 metres) and it is required to transmit over a frequency band of 1,000 kc/s to 300 kc/s (300 to 1,000 metres) inductance must be added to the aerial in order to make its reactance zero. The greater the difference between an aerial's resonant frequency and the frequency at which it is required to work, the greater is the amount of added inductance necessary to make the aerial reactance zero at the transmission frequency.

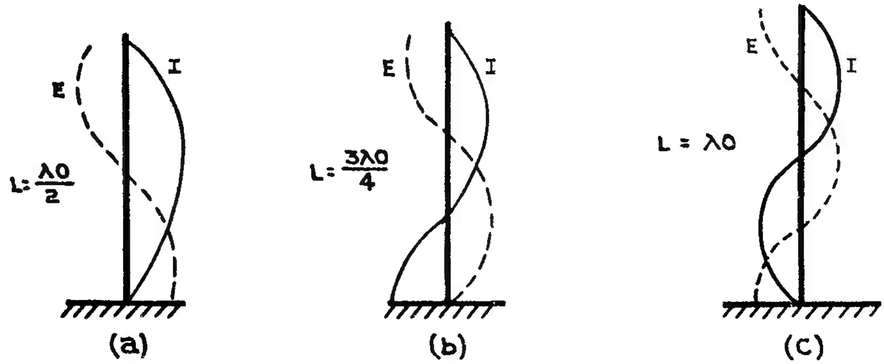

FIG. 13. STANDING WAVES.

6. RADIATION RESISTANCE.

6.1 The energy supplied to an aerial is dissipated in the form of -

(i) radio waves,
(ii) heat losses in wire and nearby dielectrics.

The radiated energy is the useful part but, so far as the aerial is concerned, it is a loss as much as the heating is a loss. In either case the dissipated power is equal to I^2R, in the case of (ii) R is a real resistance, but, in the case of radiation, R is an assumed resistance which, if it had actually been present, would have accounted for the power that disappears by radiation. The total power loss in the aerial, therefore, is $I^2 (R_R + R_2)$ where R_R is the radiation resistance and R_2 the effective resistance of the system.

The current I is usually measured at a current maximum or antinode point, any other point should be specified since the current varies at different parts of the aerial.

/The

The I.R.E. standard definition of radiation resistance is - "The quotient of the power radiated by an aerial multiplied by the square of the effective aerial current measured at the point where the power is supplied to the aerial."

For normal purposes the radiation resistance may be defined as follows -

The radiation resistance referred to a certain point in an aerial system (usually at a current loop unless otherwise specified) is the resistance which, if inserted at that point with the assumed current flowing, would dissipate the same energy as is actually radiated from the aerial system. Thus -

$$\text{Radiation Resistance} = \frac{\text{Power Radiated}}{I^2}$$

(this definition assumes R_L negligibly small, which is reasonably correct for a well designed aerial system, where R_L = losses resistance).

The current I may be measured by inserting a meter at a current loop or more readily by connecting the transmitter through a suitable meter to an artificial aerial possessing an equivalent characteristic impedance.

The radiation resistance may be calculated by integrating for the total power radiated through the hemisphere surrounding the aerial.

$$\text{Total power radiated} = \frac{160\ \pi^2\ h^2\ I^2}{\lambda^2}\ \text{watts.}$$

where I = r.m.s. value of current.
h = effective height of aerial in meters.
λ = wavelength of signal in meters.

from this we obtain -

$$\text{Radiation Resistance} = \frac{1584\ h^2}{\lambda^2}\ \text{ohms}$$

$$\text{or Radiation Resistance} = 1.76 \times 10^{-8}\ h^2\ f^2\ \text{ohms}$$

where h is as above
f = frequency in kc/s.

From this we can also derive an expression for radiated power, W,

$$W = I^2R = 1.584\ (h^2I^2/\lambda^2)\ \text{kW.}$$

/Aerial

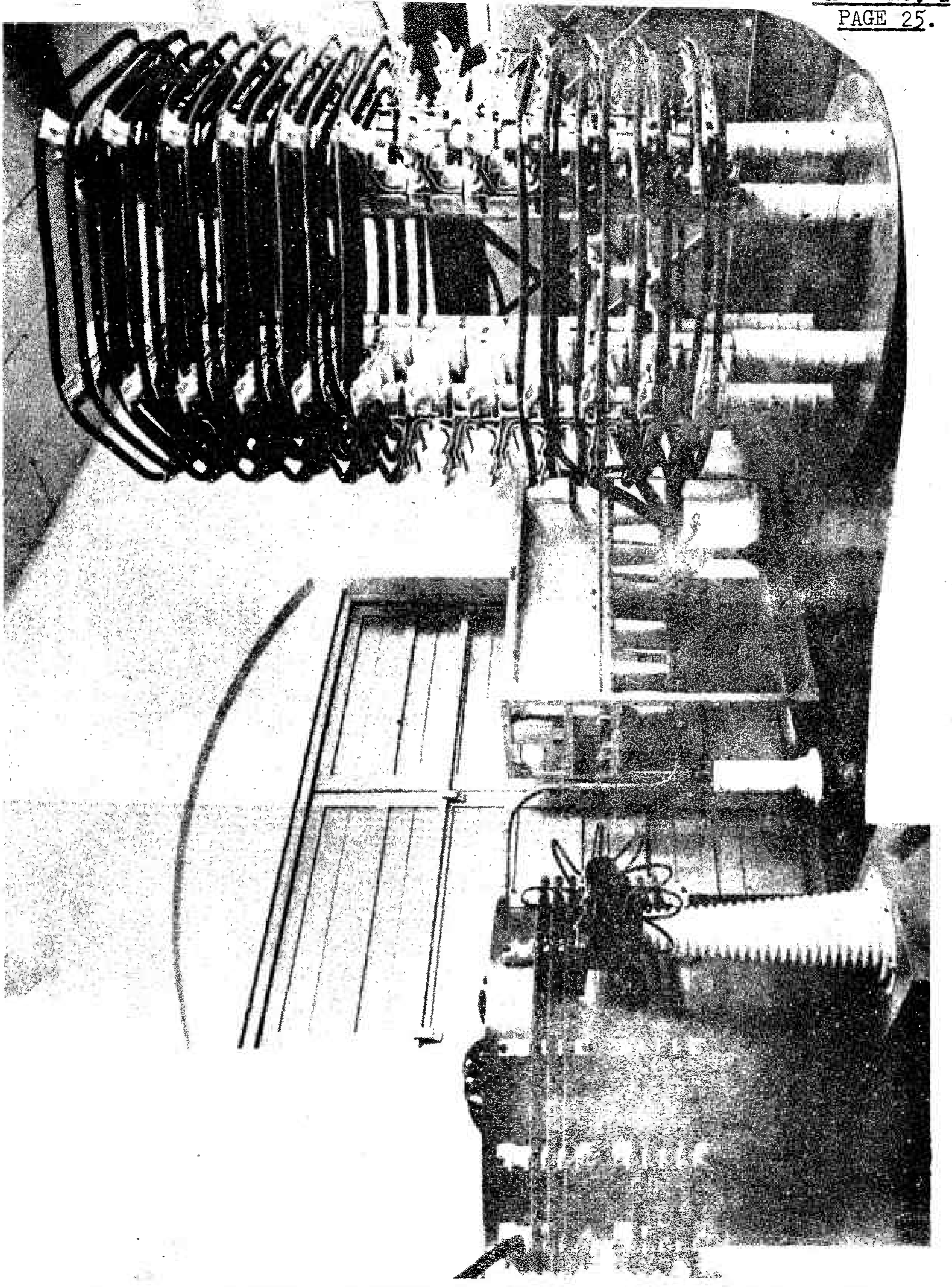

AERIAL FINE TUNING VARIOMETER AND AERIAL LOADING COIL FOR 200 kW L.F. TRANSMITTER (S.T.C.).

7. EFFECTIVE HEIGHT.

7.1 Transmitting Aerials. The effective height is defined as the length of elementary aerial which, when carrying a uniform current equal to the current flowing at the reference point in the actual aerial, will produce the same field intensity as is actually radiated.

7.2 Receiving Aerials. The effective height can be defined as the ratio of the equivalent lumped induced voltage that can be thought of as acting in the aerial system divided by the field strength of the wave that induces this voltage; or, if we can measure the voltage induced in the aerial and the voltage induced in an aerial of known effective height, then the ratio of these voltages is the ratio of the effective heights of the respective aerials.

It is a simple matter to determine the effective height of an aerial by using it as a radiator and measuring the field strength several wavelengths away, transposing the following field strength formula -

$$\xi = \frac{1.26\ f\ I_o\ h}{d}$$

where f = kc/s
h = effective height
I_o = aerial current
d = distance in kilometre
ξ = f.s. in μV/metre.

Knowing ξ we can transpose for h thus -

$$h = \frac{\xi\, d}{1.26\ f\ I_o}\ \text{metres}$$

or, alternatively $h = \dfrac{d\lambda\xi}{377 I_o}$ metres

where λ = wavelength in metres.

Fig. 14 shows the variation of radiation resistance with height of a half-wave horizontal aerial.

Some typical effective heights are -

1/2 wave ungrounded vertical aerial,

$$h_{eff} = \frac{1.41\lambda}{\pi}$$

1/4 wave grounded vertical aerial,

$$h_{eff} = \frac{2 \times \text{actual height in metres}}{\pi}$$

$$\text{Loop aerial } h = \frac{2\pi\ NA}{\lambda}$$

where N = number of turns
A = loop area in square metres
λ = wavelength in metres.

/Radiatio

Radiation resistance of 1/2 wave aerial at centre ≑ 73 to 80 ohms.

Radiation resistance of 1/4 wave aerial at bottom ≑ 36 to 40 ohms.

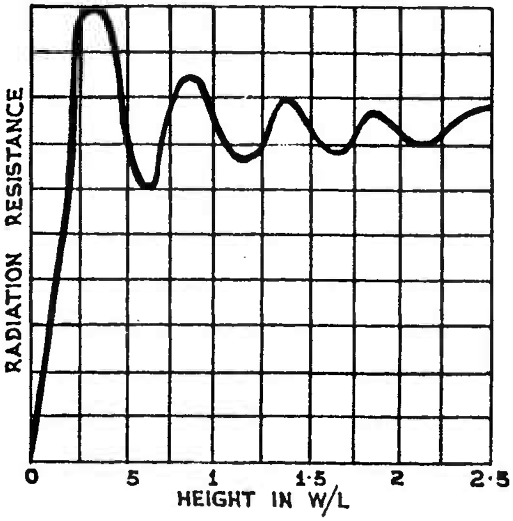

VARIATION OF RADIATION RESISTANCE WITH HEIGHT. (1/2 WAVE AERIAL) HORIZONTAL.

FIG. 14.

8. EFFICIENCY.

8.1 The efficiency of a radiator may be expressed as the ratio of radiation resistance to total resistance, that is -

$$\text{Per cent. efficiency} = \frac{\text{Radiation Resistance} \times 100}{\text{Radiation Resistance} + \text{Loss Resistance}}$$

$$= \frac{R_R \times 100}{R_R + R_L}$$

where R_R = radiation resistance
R_L = loss resistance.

The resistance R_L is made up of the following -

(i) The A.C. ohmic resistance of the aerial conductors, transmission line and aerial tuning inductance, if any.
(ii) The resistance of the earth.
(iii) Dielectric loss, since aerial system has capacity.
(iv) Eddy currents in conductors nearby such as guys, masts, etc.
(v) Leakage over insulators.

How ver

However, these may be reduced to very small values by good design, and it is usual to assume a short-wave aerial about 90 per cent. efficient.

9. EFFECTIVE RESISTANCE.

9.1 In the definition of radiation resistance given above, it was stated that R_L was assumed to be negligible. This might not always be the case and, when R_L must be considered, we may define the power radiated as being equal to -

$$W = I^2 R_{eff}$$

where R_{eff} = effective resistance of aerial system.

The effective resistance of an aerial may then be regarded as being made up of the following -

(i) Radiation resistance R_R; radiation resistance increases with frequency f and is proportional to f^2.

(ii) A resistance R_o such that I^2R_o accounts for the power losses arising from ohmic resistance and from eddy currents induced in neighbouring conductors. R_o may be taken as proportional to $\sqrt{f}$.

(iii) A dielectric loss resistance R_d such that I^2R_d accounts for dielectric loss and for loss resulting from leakage. R_d is approximately inversely proportional to f.

If the various resistances of an aerial are plotted against frequency, the result is a series of curves of the type shown in Fig. 15. The efficiency of an aerial is equal to the ratio of the power radiated to the power actually fed into the aerial. In terms of the various resistances, and expressed as a percentage, the efficiency of an aerial is given by -

$$= \frac{(R_R)}{(R_{eff})} \times 100 \text{ per cent.}$$

$$= \frac{(\quad R_R \quad)}{(R_R + R_o + R_d)} \times 100 \text{ per cent.}$$

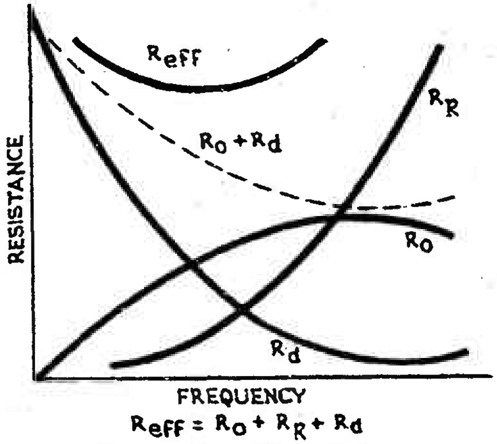

AERIAL RESISTANCES.

FIG. 15.

Aerial Losses. It is evident from this expression that it is desirable to make the radiation resistance R_R of an aerial as large as possible, and the total loss resistance $(R_o + R_d)$ as small as possible. An aerial should not be erected near

/conductors

conductors in which eddy currents may be induced, and the ohmic resistance of an aerial should be kept as small as possible by using stranded wires and by ensuring that good contact exists between the bottom of the aerial and earth. The resistance of the earth contributes a great part of the total ohmic resistance of an aerial system, and it is difficult to reduce earth resistance to a low value unless elaborate buried earth, or counterpoise earth, systems are used; such systems can be installed only in permanent stations. Dielectric losses are caused largely by the surface vegetation on the ground under an aerial. The vegetation is a very poor dielectric. Experiment shows that the dielectric loss resistance of an aerial tends to become abnormally high when there are trees or buildings on the surface of the ground under the aerial, and that a counterpoise earth system can cause a very material reduction in the value of an aerial's dielectric loss resistance. Even in permanent stations, where great care is taken to minimise aerial power losses, it is difficult to obtain high aerial efficiency, for example, the English long-wave station (18,800 metres) at Rugby has an aerial efficiency of about 11 per cent. However, as the frequency becomes higher better efficiencies are obtainable, due to the improved aerial design possible. The above effects may be conveniently summed up in the following "tree" -

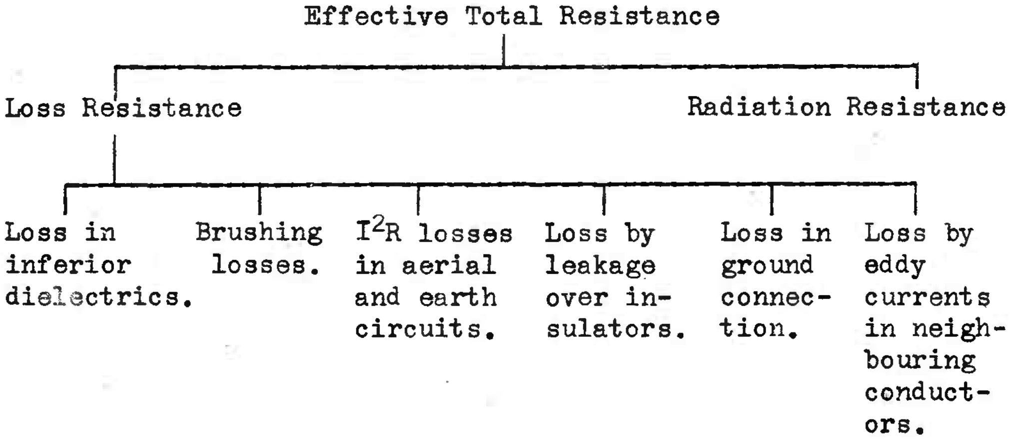

10. MISCELLANEOUS FEATURES.

10.1 Since radiators have heights up to about 750 feet, it is necessary that indication of their presence be given to aircraft. This is effected by painting the mast in alternate bands of orange and white for daylight indication and the provision of warning lighting for night.

Aircraft Warning Lighting. High radiators are a potential source of danger, and suitable warning of their presence must be given to aircraft.

Daylight. The masts are painted in alternate bands of white and orange-red to provide daylight warning.

Night. British Standard Specification No. 563 (1937) covers full action to be taken for warning aircraft at night, but the relevant details are given below -

Lights. (General)

Colour. Aviation Red.

Character. Fixed.

Angle of Emission. From 5° below horizontal to zenith for 360° in azimuth.

Intensity. Maximum intensity horizontal. 30 candles 5° above horizontal. Total flux shall be not less than 60 lumens.

Number.

Mast Height.	Number	Location
200-350 feet	1	At highest point.
350-425 "	2	Second at 200 ft. up.
425-575 "	3	Top, 200 ft. up and midway between these.
575-725 "	4	Top, 200 ft. up and 2 equally spaced between.

Lights shall be duplicated or fitted with automatic replacing device.

The above procedure shall be applied as follows -

(i) All masts over 500 ft. within 10 miles of capital city aerodrome, 40 miles of the coast and 20 miles of recognised air route.

(ii) All masts 200-500 ft. within 3 miles of capital city aerodrome, 40 miles of the coast and 20 miles of recognised air route.

(iii) All other masts over 200 ft. high from sunset till normal closing down time of station and during periods of low visibility.

(i) and (ii) shall be lit automatically from sunset to sunrise and during periods of low visibility.

Fig. 16 shows a typical mast lighting filter, and Fig. 17 a typical mast lighting installation.

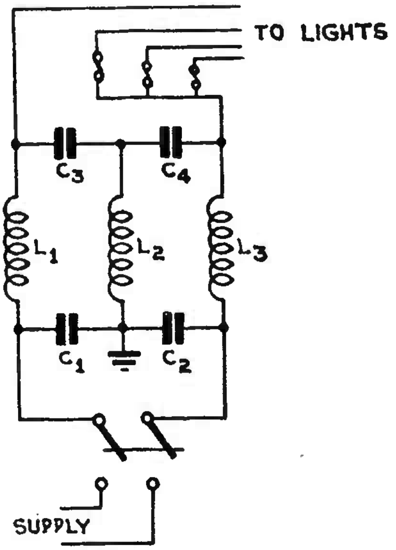

TYPICAL MAST LIGHTING FILTER.

C_1-C_4 0.1 µF mica 5 amp. 500 V. D.C. 500-1,500 kc/s.
L_1,L_2, 12" 16 S.W.G. on 6" former.
L_3 12" 22 D.C.C. on 6" former.

FIG. 16.

/Fig. 17.

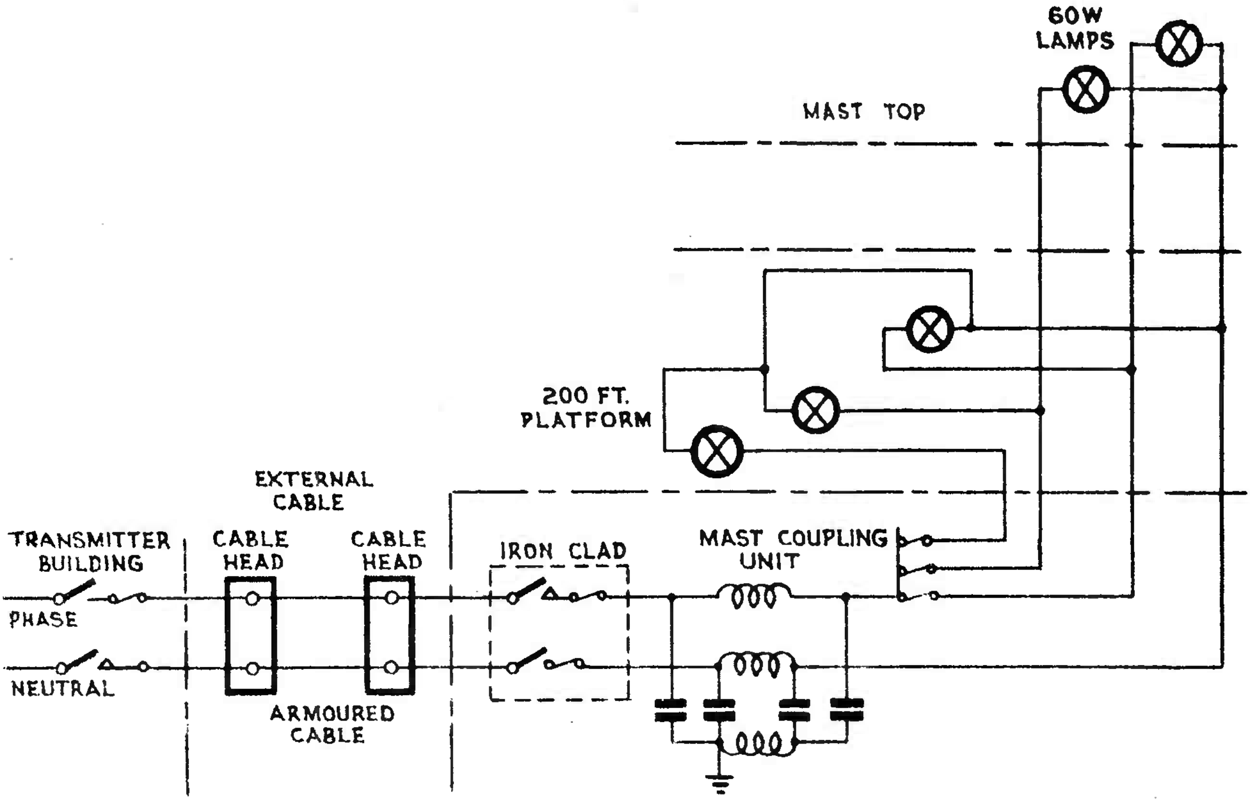

FIG. 17. TYPICAL MAST LIGHTING INSTALLATION.

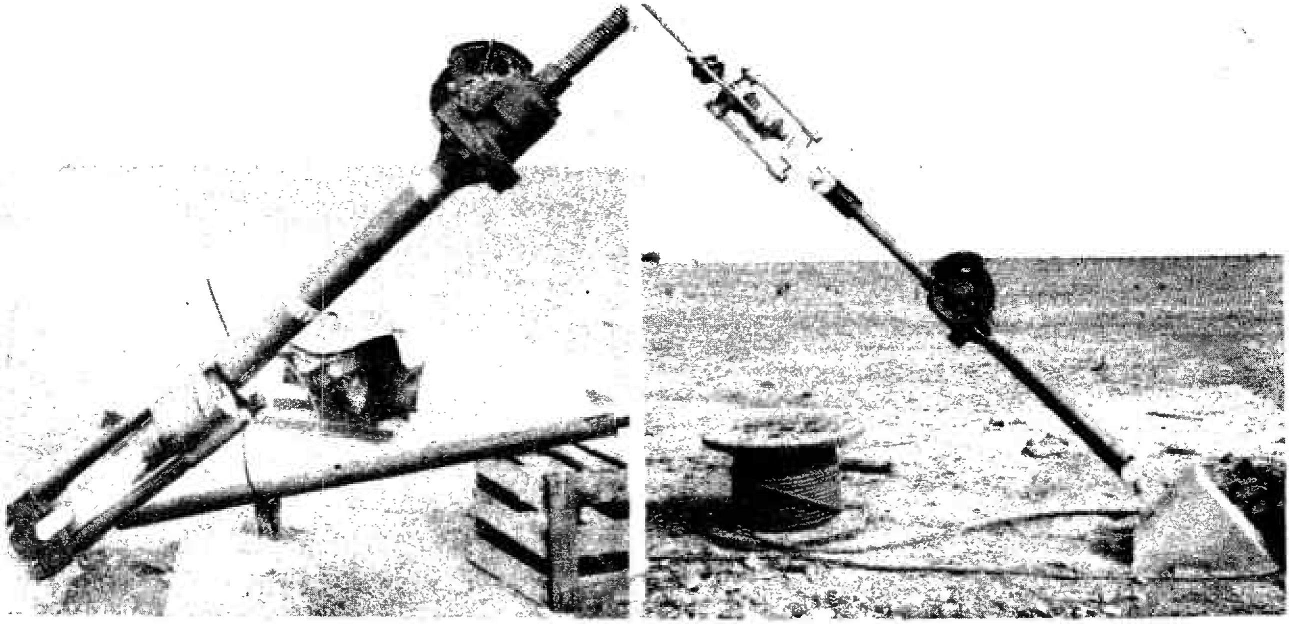

TWO VIEWS OF GUY ANCHORS, 3LO/AR.
(DURING ERECTION OF MAST.)

Lightning Protection. Tower type radiators require adequate protection against the effects of lightning.

The protection usually takes the form of a horn gap fitted at the base of the mast as shown in Fig. 18.

The gap is adjusted to flash over at the point of connection.

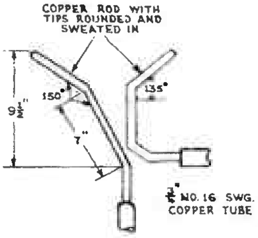

DETAIL OF LIGHTNING DISCHARGER

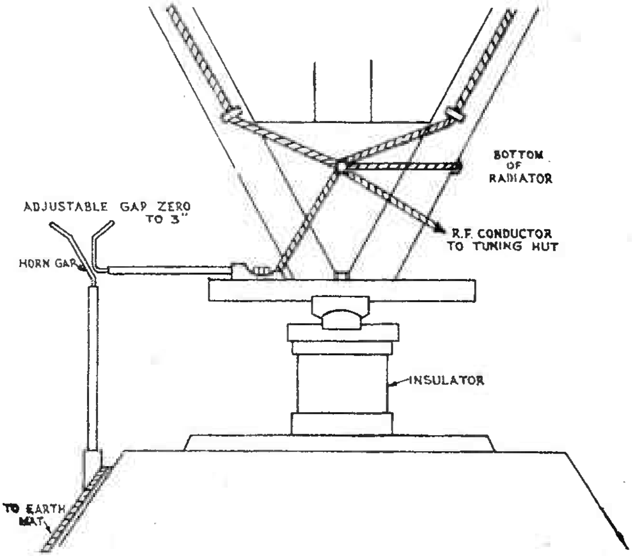

FIG. 18. LIGHTNING DISCHARGER ON RADIATOR.

11. TEST QUESTIONS.

1. State the factors on which radiation of electromagnetic waves depend.
2. What are the essential requirements of a transmitting aerial in the broadcast band?
3. Give the classifications of broadcast aerials.
4. Sketch a typical top loaded transmitting aerial.
5. Why is a counterpoise used?
6. Discuss standing waves in relation to broadcast aerials.
7. What is radiation resistance?
8. What factors contribute to the effective total resistance of an aerial?

END.

COMMONWEALTH OF AUSTRALIA.

Chief Engineer's Branch,
Postmaster-General's Department,
Treasury Gardens,
Melbourne, C.2.

COURSE OF TECHNICAL INSTRUCTION.

RADIO II.

AERIAL COUPLING CIRCUITS.

CONTENTS.

---

1. INTRODUCTION.

1.1 This Paper deals briefly with the coupling of Radio Transmitters to aerials. (Aerial coupling circuits for radio receivers are discussed in Paper No. 5.)

For full efficiency, the power amplifier valve of a radio transmitter requires to work into a pure resistance of optimum value. This is usually a rather high value - several thousand

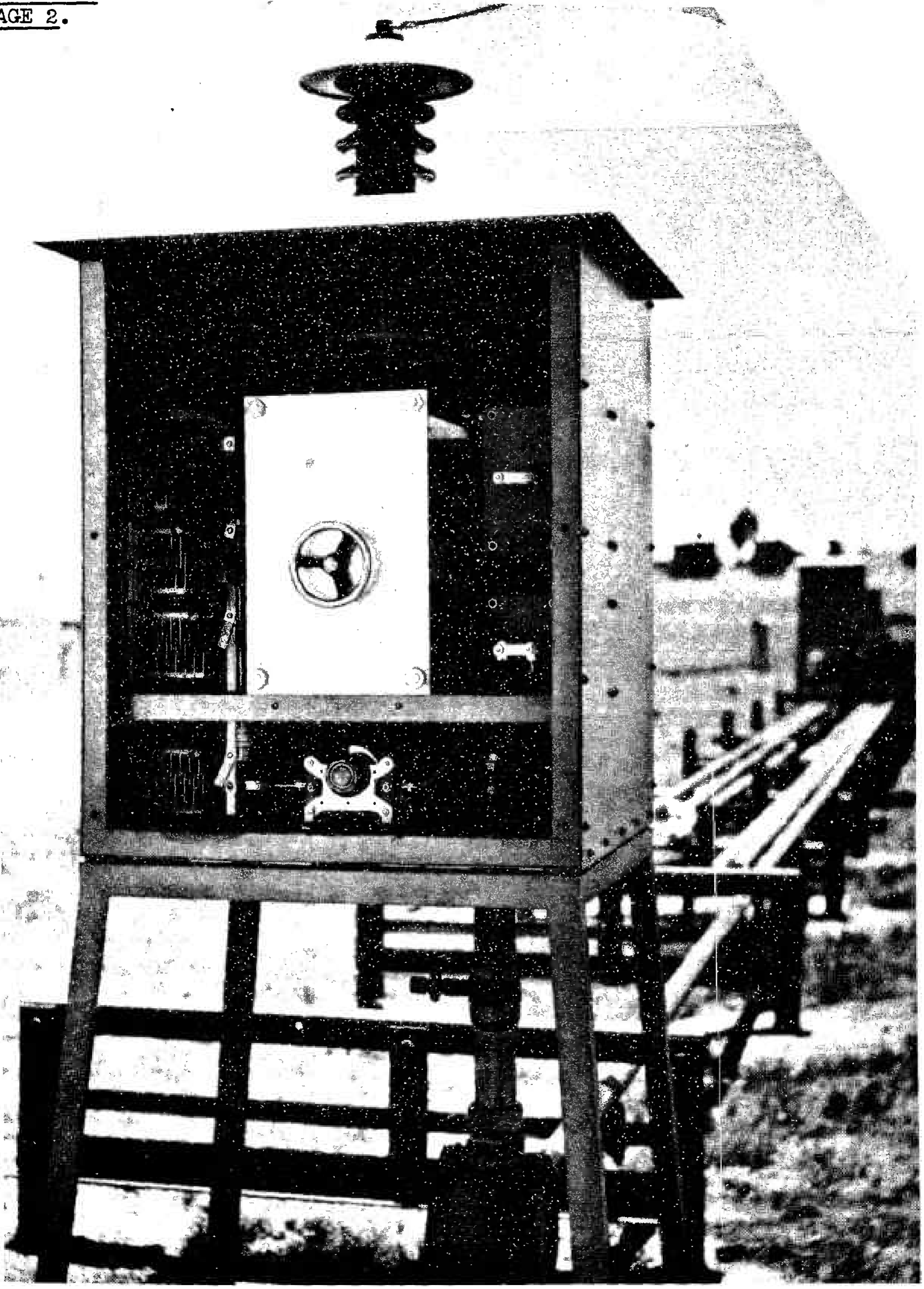

HIGH FREQUENCY AERIAL COUPLING BOX.

ohms. A tuned circuit is provided to tune away stray capacities, but the resistive load must come from the aerial.

As the optimum load resistance rarely equals the aerial impedance, it is necessary to use some form of transformer to step the aerial impedance to the required value; the anode tank circuit of the final stage forms the basis of this transformer.

Two conditions of coupling are required -

(i) Where aerial is coupled directly to the transmitter.
(ii) Where aerial is coupled via a transmission line.

2. DIRECT COUPLING.

2.1 There are two classes of aerials to be considered -

(a) Resonant.
(b) Non-resonant.

The resonant aerial calls for two basic adjustments only - tuning of the anode "tank" and adjustment of the load, whilst in the case of the non-resonant type an additional process is needed, namely, bring the aerial system into resonance.

2.2 Resonant Aerials. There are many circuits to choose from, and Fig. 1 shows some typical coupling circuits for resonant aerials, both balanced and unbalanced types.

In Fig. 1a the transformer ratio is adjusted by variation of the tapping point, and in Fig. 1b by moving the coupling coil.

In these the anode is tuned for minimum feed, and the tap or coupling increased until a point is reached where the current in the aerial ceases to rise.

In Figs. 1c and 1d the transformer ratio depends on the ratio of C_1 to C_2. The theoretical reactance value of C_2 is -

$$\sqrt{\text{aerial impedance} \times \text{valve load resistance}}.$$

The procedure of adjustment is to short-circuit C_2, tune to resonance and then adjust the load on the valve by varying C_2 whilst maintaining resonance with C_1.

/ Fig. 1.

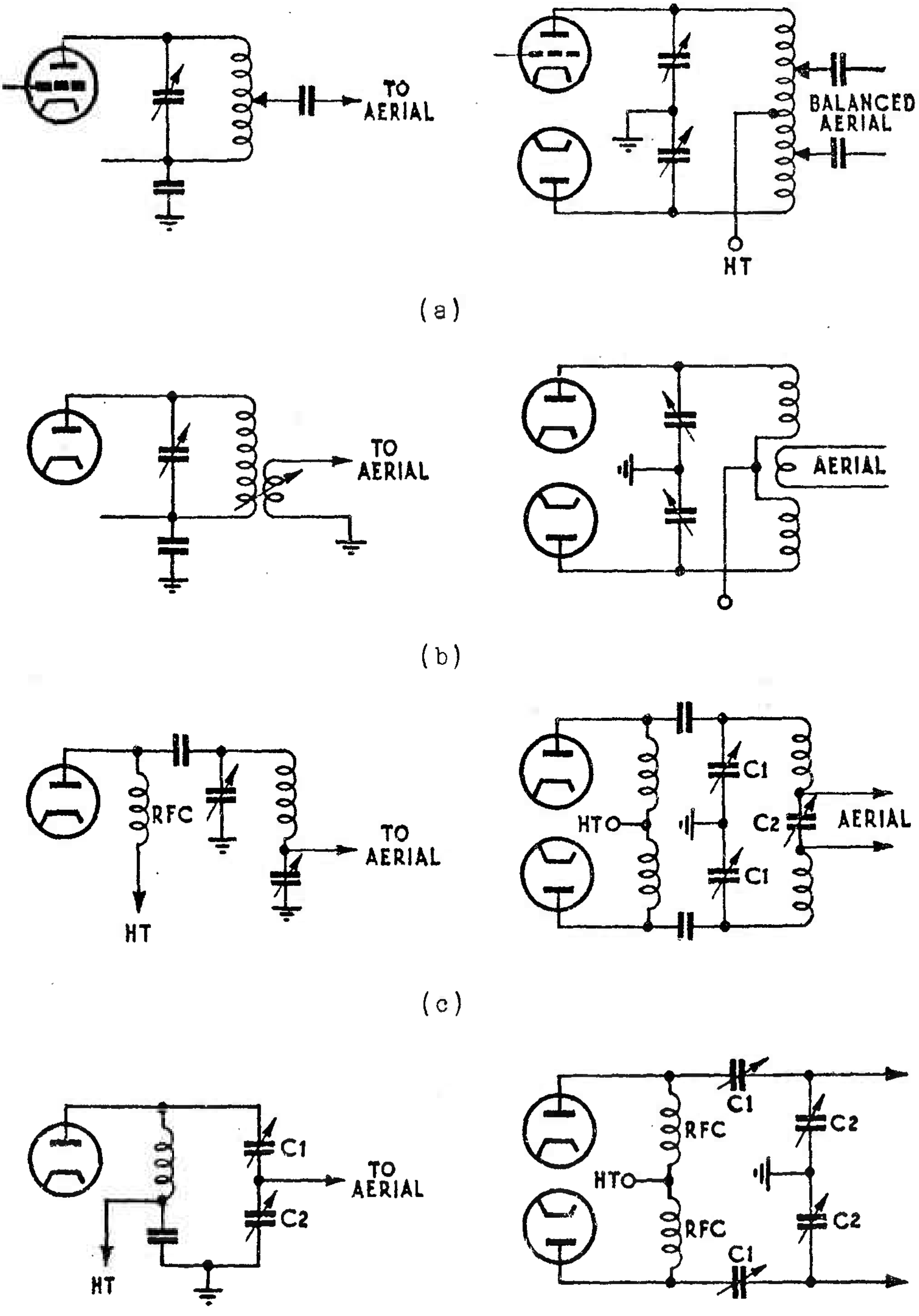

(a)

(b)

(c)

(d)

COUPLING METHODS FOR RESONANT AERIALS.

FIG. 1.

2.3 Non-Resonant Aerial. Fig. 2 shows typical circuits for systems requiring an extra element for bringing the aerial system into resonance. The actual choice of aerial tuning circuit is dependent upon the type of aerial. There, again, use may be made of variable tap and fixed coupling, or vice versa. In these couplers, starting with loose coupling or "high" tap, the circuits are first set in resonance and then the couplings increased or the tap lowered until optimum aerial current occurs.

When one part is balanced and the other unbalanced, special arrangements are necessary to avoid unbalance or stray capacity coupling. The balanced coil may be split in the centre and the other inserted in the gap, using any of the circuits shown in Figs. 1 and 2, although link coupling is the best method in such cases.

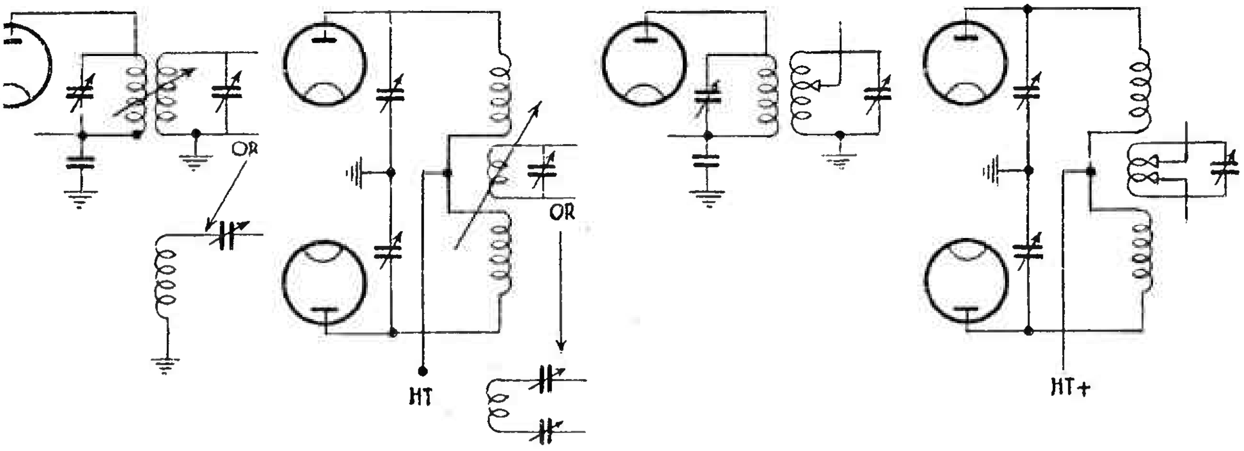

(a) (b)

COUPLING METHODS FOR NON-RESONANT AERIALS.

FIG. 2.

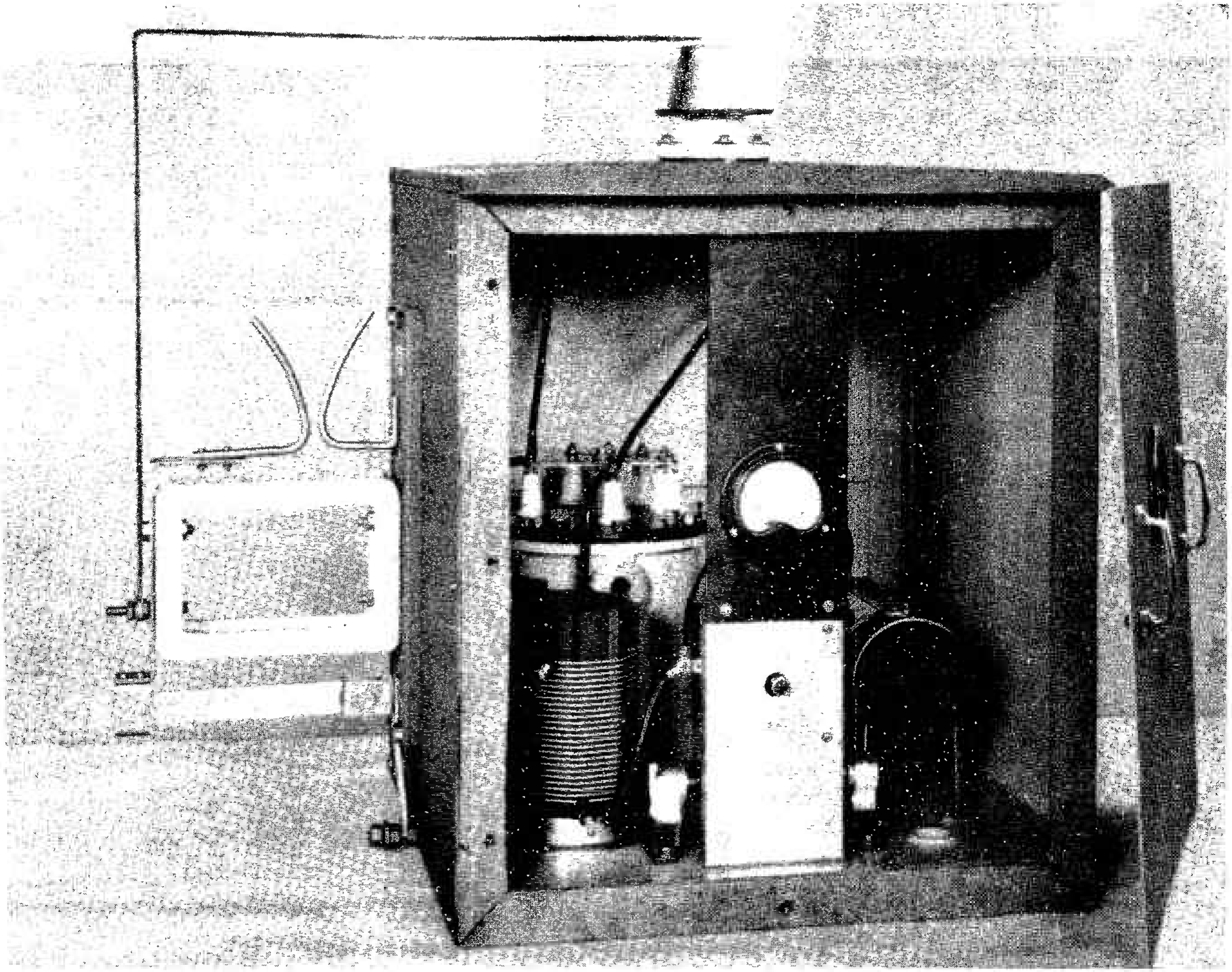

These line terminating units are essential accessories to all transmitters as they provide the means for matching a line from a broadcast transmitter to the aerial. As normal practice demands that these be mounted externally, usually at the base of the aerial, all parts are enclosed in a metallic weatherproof housing, which is fitted with a removable front cover for ready access to the interior. A circular window allows the aerial ammeter to be easily read, and a switch is provided to short-circuit the meter when readings are not being taken.

Each unit is designed so that a transmission line of impedance between 70 and 120 ohms, of which one side is grounded, may be matched to an aerial having a reactance of plus or minus 200 ohms with a resistance between 20 and 200 ohms. Electrically, the units consist of "T" type networks, having adjustable line and aerial loading inductors and shunt capacitors.

AERIAL COUPLING UNIT 500 WATT TRANSMITTER.

Circuits for link coupling are shown in Fig. 3, and may be used generally for any type of circuit or aerial. They are somewhat more difficult to adjust than the others, but offer greater flexibility and simplify the station lay-out.

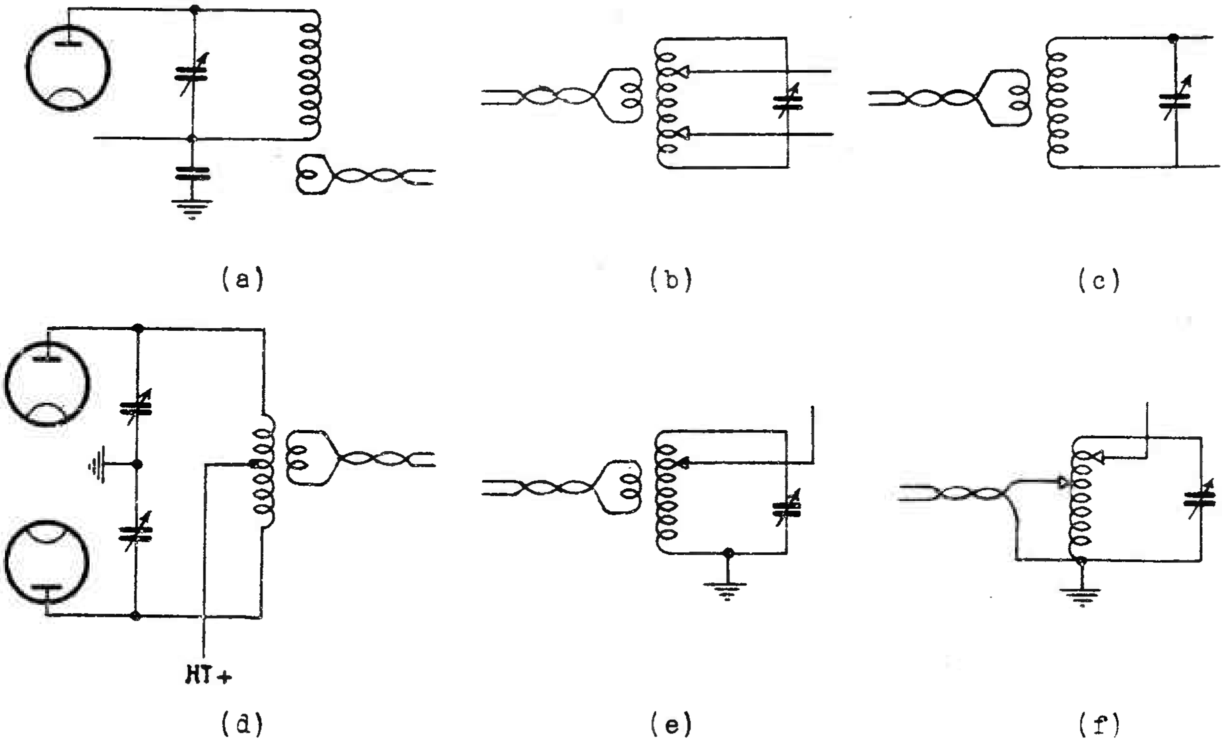

(a) (b) (c)

(d) (e) (f)

LINK COUPLINGS.

FIG. 3.

The link may be either twin low impedance or concentric feeder, preferably earthed at some point, and adjustment is made by the number and position of the turns.

In order that the introduction of link coils shall not affect the tuning of their respective circuits, due care must be taken to see that it is a true inductive coupling and not a capacity coupling. For this, the link must be applied at the "cold" or "earth" end of the coil in the case of single-sided circuits, or at the centre in balanced circuits.

Adjustment is made by tuning the output tank circuit for minimum feed to valve, and the coupling at both ends of the link gradually increased until the power amplifier is correctly and fully loaded.

In all aerial coupling networks which use an aerial tuned circuit as well as the anode tank, the aerial coils should be chosen, or the taps and couplings adjusted to give fairly heavy damping (flat damping) of the circuit, as, in this way, the loss in the circuit is minimised.

These are universal and will couple any type of transmitter to any aerial.

/ 3.

3. TRANSMISSION LINE COUPLING.

3.1 The means for connecting the source of radio frequency power to the aerial is closely related to aerial design. It is generally desirable to erect aerials at a distance from the transmitter. Several kinds of line have been used for this purpose, such as the balanced open wire line, the concentric tube type, etc. Owing to the large surface area and to the shielding effect upon the inner conductor which eliminates radiation losses, the concentric type is one of the most efficient. The costs of the systems favour the open wire, but a brief description of several systems will be given after a short definition of transmission lines.

Definition - Transmission Lines at Radio Frequencies. Any arrangement of conductors used for transferring electrical energy from one point to another may be regarded as constituting a transmission line. In radio frequency practice, where the distance concerned is more than a small fraction of a wavelength, such lines usually take one of several well established forms. The most important of these forms are described.

The 2-Wire Open Line consists of two wires of equal diameter, as nearly as practicable uniformly spaced throughout their length. The wires are supported by insulators at such intervals as required by the consideration of maintaining the uniformity of spacing, and are surrounded by air. It is desirable that such lines should be operated in a balanced condition; that is, the currents in the two wires should be equal in magnitude but opposite in phase, as also should be their voltages to ground; this should hold good at all points along the line.

In the construction of open wire lines, certain precautions must be observed. The lengths of the two conductors should be equal. Dissymmetry is apt to arise at corners; insulator tie wires, joints and even insulators themselves are irregularities. Opportunities for spurious coupling between the aerial and the line should be minimised, particularly near the aerial. The currents so induced flow in the two wires, acting as a single conductor (longitudinal currents), and may affect transmitter operation. Some control is obtained by circuits which bring these currents to a junction exactly out of phase, details of which are beyond the scope of these notes.

/ 4.

4. IMPEDANCE MATCHING.

4.1 To reduce standing waves, losses, etc., it is very desirable to avoid any impedance mismatches between the transmitter and the aerial. The best place for this matching to take place is near the junction of the aerial and the transmission line.

When a transmission line is terminated with a resistance equal to its characteristic impedance, power is absorbed by the resistance as fast as it is supplied. There are no standing waves along the line, and the current distribution is uniform along its length. The loss in the line is then a minimum and the impedance at the sending end is the same as at the load end, irrespective of the length of the line. If the load is not of the correct value, the line is "mismatched". Standing waves are formed by reflection at the point of mismatch with a consequent loss of power. The process of matching is best considered as the combination of two main steps, firstly, neutralising any reactance which appears across the aerial feed terminals (that is, tuning the aerial to resonance) and, secondly, transforming the resistance of the aerial so that it is equal to the characteristic impedance of the line.

4.2 There are several devices available for tuning aerials. The most simple consists of selections of transmission line known as "stubs" or building out sections. This is the most economical system, and, when only one frequency is transmitted from an aerial, is very suitable. In Fig. 4a, L_a, C_a and R_a represent the inductance, capacitance and resistance of an aerial, respectively. If the reactances X_L and X_C are not equal, then the aerial will not appear as a pure resistance across the points AB, but will possess a reactive component. This component may be neutralised by connecting a circuit across the terminals AB, consisting of an inductance and capacity L and C, and adjusting for over-all resonance. When using transmission lines, the circuit LC may be replaced by a "stub" section of line with an adjustable short circuit, as shown in Fig. 4b.

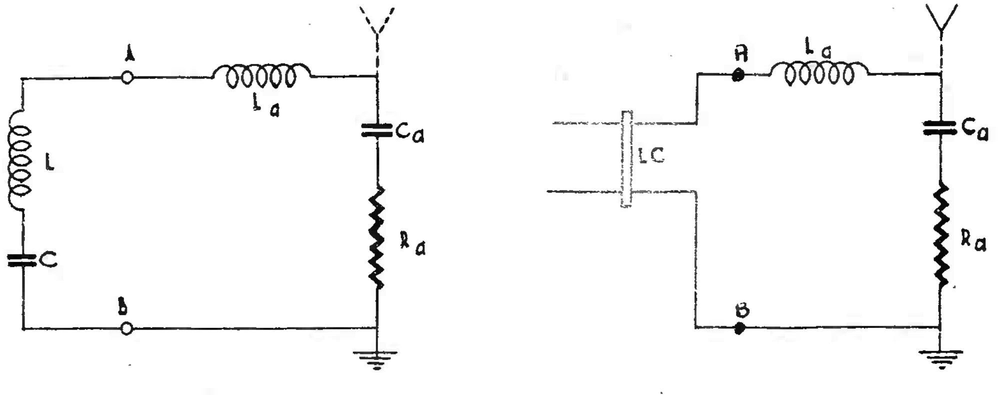

STUB TUNING.

FIG. 4.

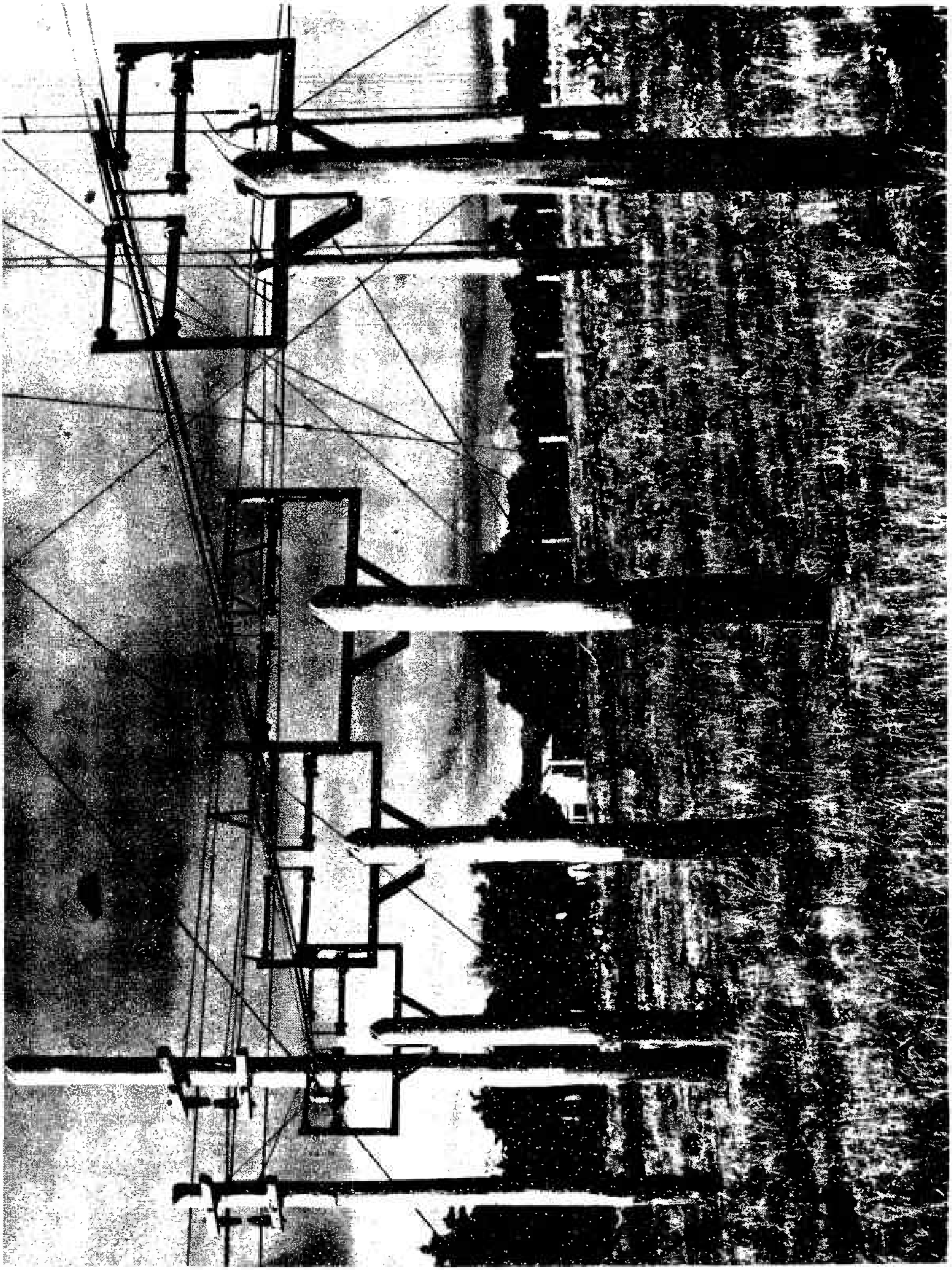

MATCHING STUB (ALFORD). (3-FREQUENCY ARRAY. 15 Mc/s.)

If the stub line is made less than a quarter wavelength long by moving the shorting bar, it will possess inductive reactance, while, if longer, it will have capacitive reactance (provided it is less than one half wavelength long). Therefore, the combination of stub and aerial may be tuned to resonance by altering the position of the shorting bar.

In order to match the transmission line characteristic impedance to the aerial, a second short-circuited stub line one quarter wavelength long may be connected across the aerial terminals as in Fig. 5a. This will not affect the resonance of the aerial because a quarter wave line is equivalent to a resonant circuit. The line may then be matched by connecting it to suitable points PP on this second stub. Moving the connection points towards the short circuit lowers the apparent impedance of the aerial and so enables a match to be obtained, provided that the impedance of the line is less than the resistance of the aerial at the points AB.

If the impedance of the line is higher than that of the aerial at the points AB, the short circuit may be removed from the end of the stub. Now, movement of the connection towards the end of the stub will increase the apparent resistance of the aerial and enable a match to be obtained.

These two operations may be performed with the aid of a single stub by connecting it to points PP on the transmission line and simultaneously adjusting the length of the stub.

Resonance is determined by the length from the terminals AB to the shorting bar of the stub.

Resistance matching is determined by the length from the points PP to the shorting bar. (See Fig. 5b.)

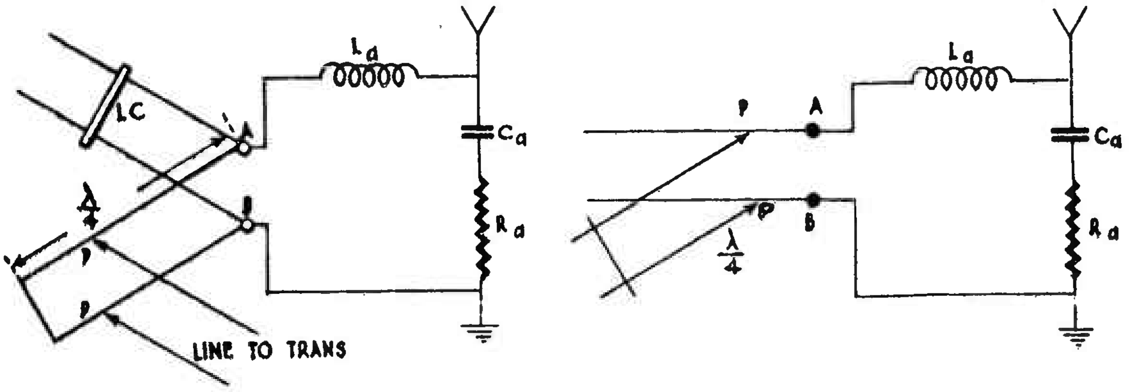

(a)

(b)

USE OF SHORT-CIRCUITED STUB.

FIG. 5.

The principles upon which the above operation is based will be briefly reiterated here in view of the many applications of standing wave theory in radio communication.

When standing wave conditions exist on a line, the impedance looking towards the line termination varies from point to point. For instance, at a point of maximum voltage, the current is a minimum, and the impedance will then be high - actually a pure resistance higher than the characteristic impedance of the line by a factor equal to the standing wave ratio. At a point a quarter wavelength from the voltage maximum, there will be a voltage minimum and a current maximum; the impedance will be a resistance lower than the characteristic impedance of the line by a factor equal to the reciprocal of the standing wave ratio. At intermediate points, the impedance will have intermediate values and will also be partly reactive. It is possible to find a point where the line impedance is equal to its characteristic impedance shunted by a pure reactance. If, now, an equal and opposite reactance is connected across the line at this point, the resultant shunt reactance becomes infinite; the impedance at this point becomes equal to the characteristic impedance of the line and the remainder of the line back to the source of power operates under matched conditions with no standing wave. The added reactance for tuning the line usually takes the form of a stub or short branch section of transmission line of similar construction to the main line, terminated in either an open or a short circuit; the short circuit is in practice much easier to adjust.

Other means of matching, of course, such as radio frequency transformers, may also be used, and in Fig. 6 are shown some other methods of matching.

Fig. 6a shows what is known as the "Y" or "delta" match. The distance "d" determining the aerial impedance (remember the impedance of a half-wave aerial is about 70 ohms at the centre and tapers out to about 3,000 ohms). Variation of this enables a good match to be obtained. Dimension "e" is a function of wavelength and serves to provide a smooth tapering transformation of impedance between the line and the aerial.

Figs. 6b and 6c are termed "quarter wave transformers"; Fig. 6b being used when the aerial is a whole number of wavelengths long, and Fig. 6c when it is an odd number of half-waves.

/ Another

Another method of interest is shown in Fig. 6d, and is known as the "Q" bar. In Fig. 6d the quarter wave bar is built to have a characteristic impedance equal to $\sqrt{R_r}$ where R is the line impedance, and r is the aerial impedance. This system is not practicable for matching to a voltage point.

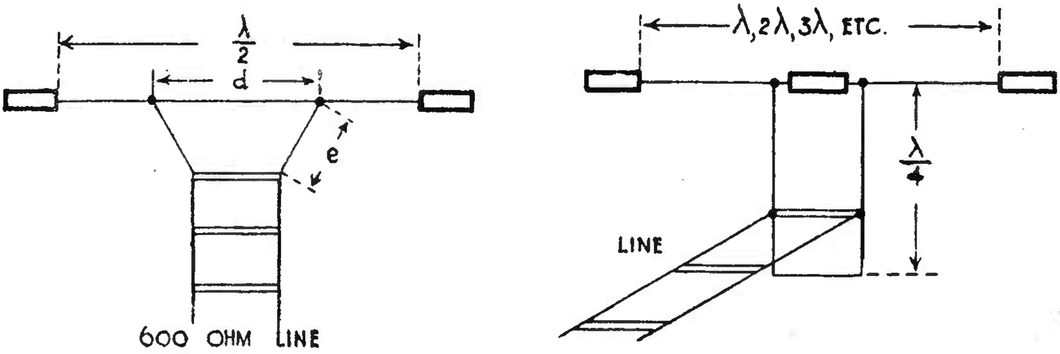

(a) Delta.

(b) Quarter Wave Transformer.

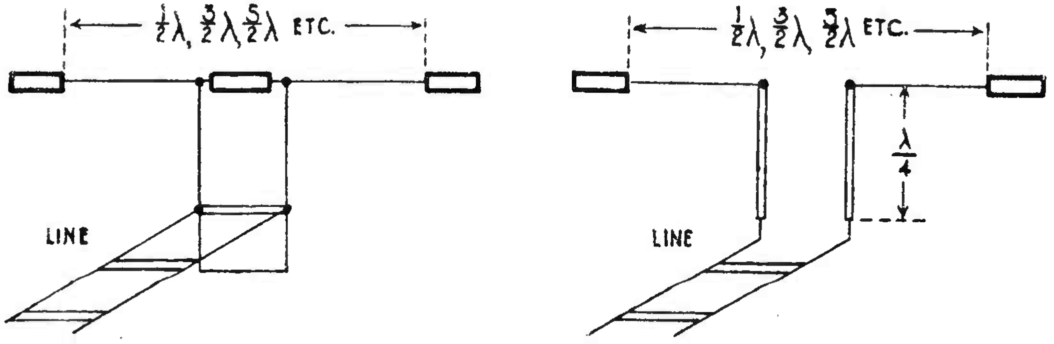

(c) Quarter Wave Transformer.

(d) "Q" Bar.

ALTERNATIVE MATCHING SCHEMES.

FIG. 6.

The Coaxial Line consists of a wire, rod or tubular conductor suspended inside a larger conducting tube so that the axes of the two coincide. In large lines of this type, the central conductor is carried by insulating supports at intervals. Otherwise, the dielectric may be air, or, for high-power work, dry nitrogen under pressure; the latter is capable of withstanding voltages several times the maximum which air at normal pressure will withstand. In smaller lines, the whole of the space between the two conductors is occupied by a solid dielectric. The outer conductor is normally operated at earth potential.

/ The

The main difference, apart from construction, between open wire lines and concentric lines is the impedance. Concentric lines, generally, have an impedance of the order of 73 ohms, and, in a large number of cases, this is less than the aerial impedance. In general, there are three cases to consider -

(i) When the aerial impedance contains a resistance component only.

(ii) When the aerial impedance contains a resistance component and a reactive component, either capacitive or inductive.

(iii) When condition (ii) obtains but the reactive component is partially compensated for by an added reactance of opposite sign. See Figs. 7a and 7b.

The formulae for calculating the values of L, C and X are not given since they are somewhat complex.

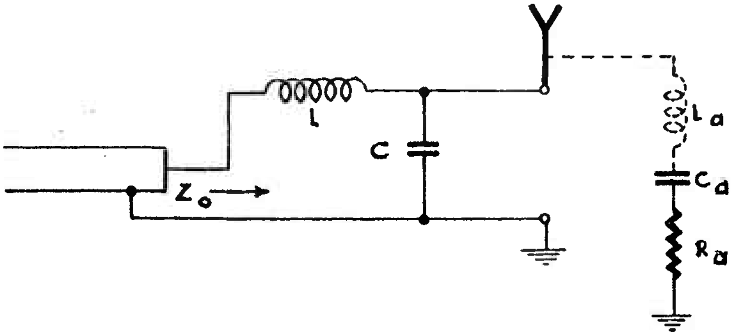

(a) Cases (i) and (ii).

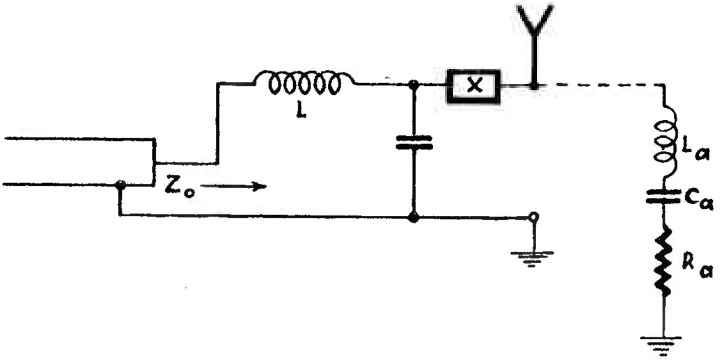

(b) Case (iii) Where X = Added Reactance.

COAXIAL LINES.

FIG. 7.

5. TERMINATION ADJUSTMENTS.

5.1 The usual procedure in adjusting a transmission line termination for a condition of no-wave reflection on the line is as follows -

(i) The number of coupling turns is calculated so as to give the proper value of M. With the tank circuit open, the aerial is tuned to exact resonance by means of an external oscillator loosely coupled to it at the fundamental frequency.

(ii) The tank circuit is now connected into the circuit and tuned to resonance. This is indicated by a condition where the current in the aerial circuit becomes a minimum.

(iii) The transmission line is then connected across the tank circuit without making any changes in the previous adjustments.

(iv) Correct termination may be checked by measuring the transmission line currents at the ends and quarter wave points along the line by means of suitable meters. When proper termination has been effected, the transmission line currents will be identical at all points along the line.

A convenient method of measuring these currents is by means of a standing wave detector, such as shown in Fig. 8.

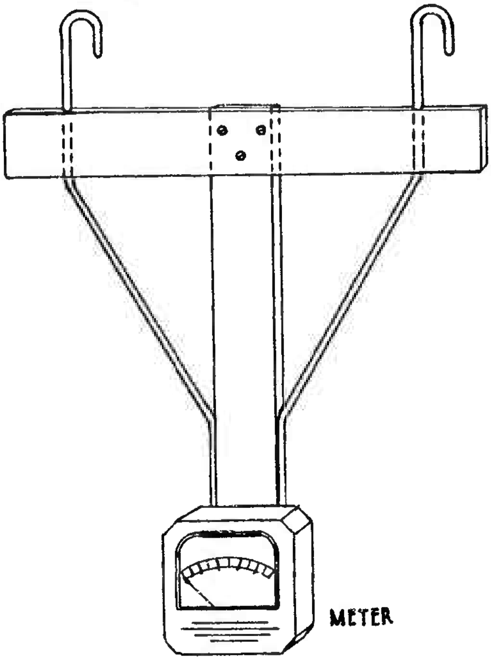

STANDING WAVE DETECTOR.

FIG. 8.

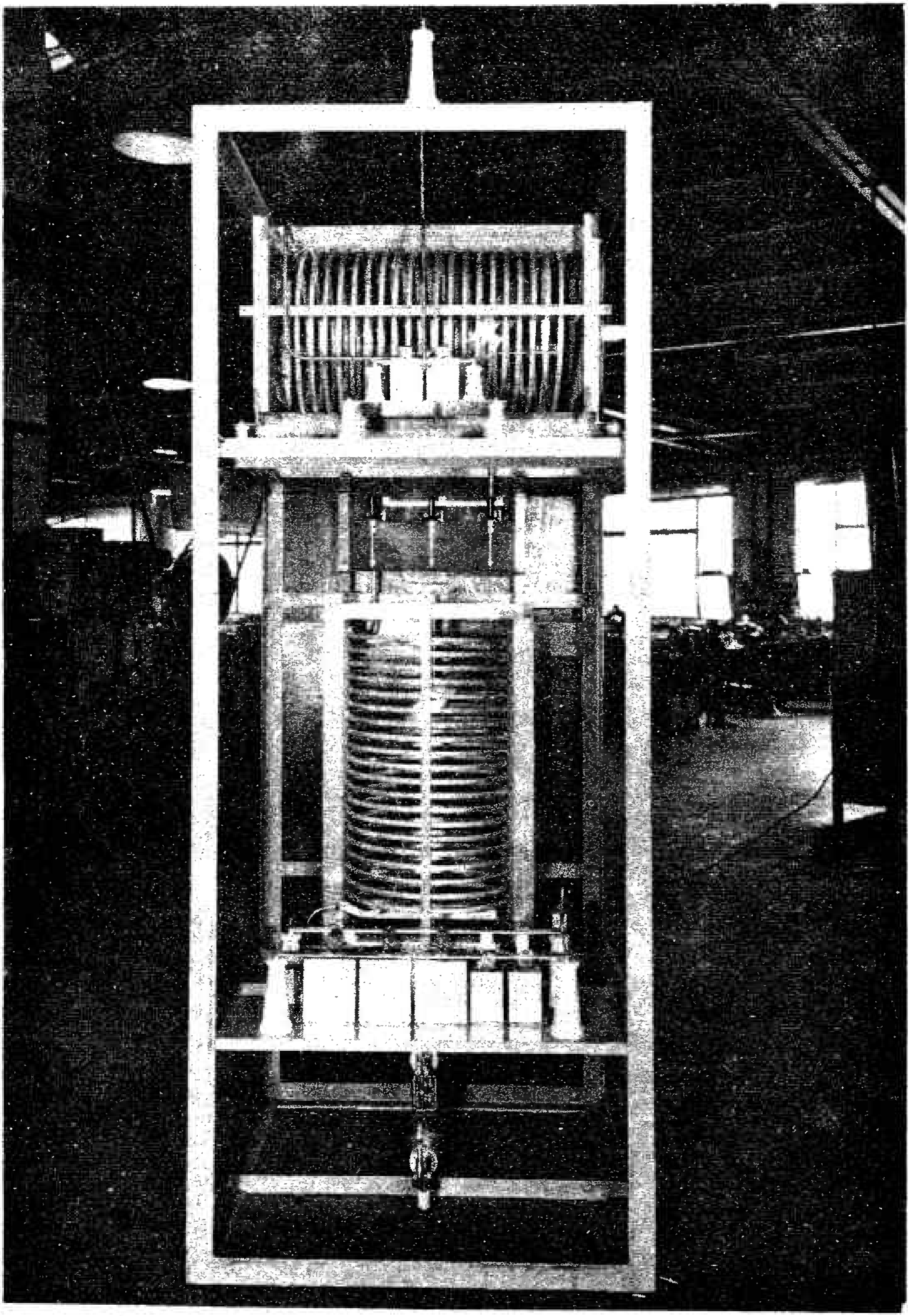

LINE TO AERIAL COUPLING COILS. 3LO/3AR.

The frame is of light wood and the wires from the meter hook over the line. Alternatively, the loop may be closed by a wire along the top, parallel to but not touching the line. In coaxial lines, fittings are sometimes provided for reading the voltage on the central conductor with a high impedance meter.

The voltage across a balanced line may be measured with a device known as a quarter wave voltmeter - a quarter wavelength stub line connected across the main line and shorted at its other end through a thermocouple ammeter. The line voltage is equal to the indicated current multiplied by the characteristic impedance of the stub. If, on a line working under standing wave conditions, the maximum and minimum voltages are thus measured, the transmitted power is equal to the product of the two voltages divided by the characteristic impedance of the line. (See Fig. 9.)

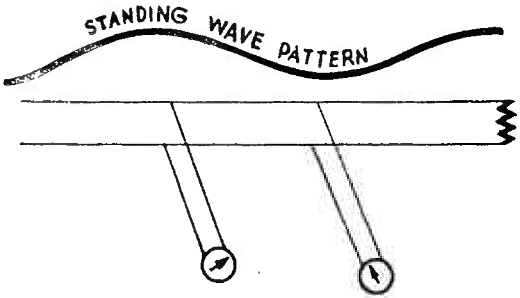

QUARTER WAVE VOLTMETER METHOD OF POWER MEASUREMENT.

FIG. 9.

In constructing an open wire line on poles for high frequency service, and where only a single frequency is involved, it is good practice to make the distance between poles an odd number of quarter wavelengths. The insulators supporting the wires introduce a small shunt capacity additional to the normal line capacity, and, consequently, some reflection occurs at each pole; by spacing the poles as indicated, the reflected waves from adjacent poles very nearly cancel one another out.

In a coaxial line of given outside radius, it is possible to show that the attenuation is a minimum when the ratio of outside to inside radius is about 3.6, giving with air dielectric a characteristic impedance of about 77 ohms. However, the ratio of radii may vary from 2.5 to 5 with very little change in the attenuation.

/ 6.

6. DUAL COUPLING UNIT.

6.1 Of interest here is the dual coupling unit as used in Melbourne and Sydney to couple two transmitters on different frequencies to a common radiating system (190° radiators).

The coupling system provides a means of feeding power from each transmitter simultaneously to the aerial tower, and prevents power from being fed from one transmitter to the other. The type of coupling system employed is shown in the schematic diagram of Fig. 10.

Power is fed from each transmitter by means of separate coaxial transmission lines to the coupling, but at the base of the mast the coupling system employs five units, namely -

(i) Two π type coupling units provided for matching the characteristic impedance of each transmission line to the aerial resistance at the appropriate frequency.

(ii) Two 3-element selective units are designed to be resonant to the frequency of its corresponding coupling unit, and anti-resonant to the other frequency provided in series with the output of each coupling unit. The low frequency selective unit thus passes power from its own coupling unit to the aerial and offers a high impedance to the high frequency voltages on the aerial, which would otherwise be fed back through the low frequency coupling unit to the low frequency transmission line.

(iii) An aerial tuning unit in which the power from the two transmitters is combined, provides reactance elements which tune out the aerial reactance at each frequency. Looking from the low frequency coupling unit towards the aerial, and neglecting stray capacitances, the impedance presented is equal to the aerial resistance for the low frequency, and is very high for the high frequency.

The circuit of Fig. 10 includes the mast lighting filters, since these are also located in the tuning hut.

The Balanced Screened Line consists of two wires, rods or tubes, of equal diameter, symmetrically suspended inside a conducting tube. The same types of construction are used as for the coaxial line. The two inside conductors are operated in a balanced condition, with the outer conductor at earth potential.

/ Fig. 10.

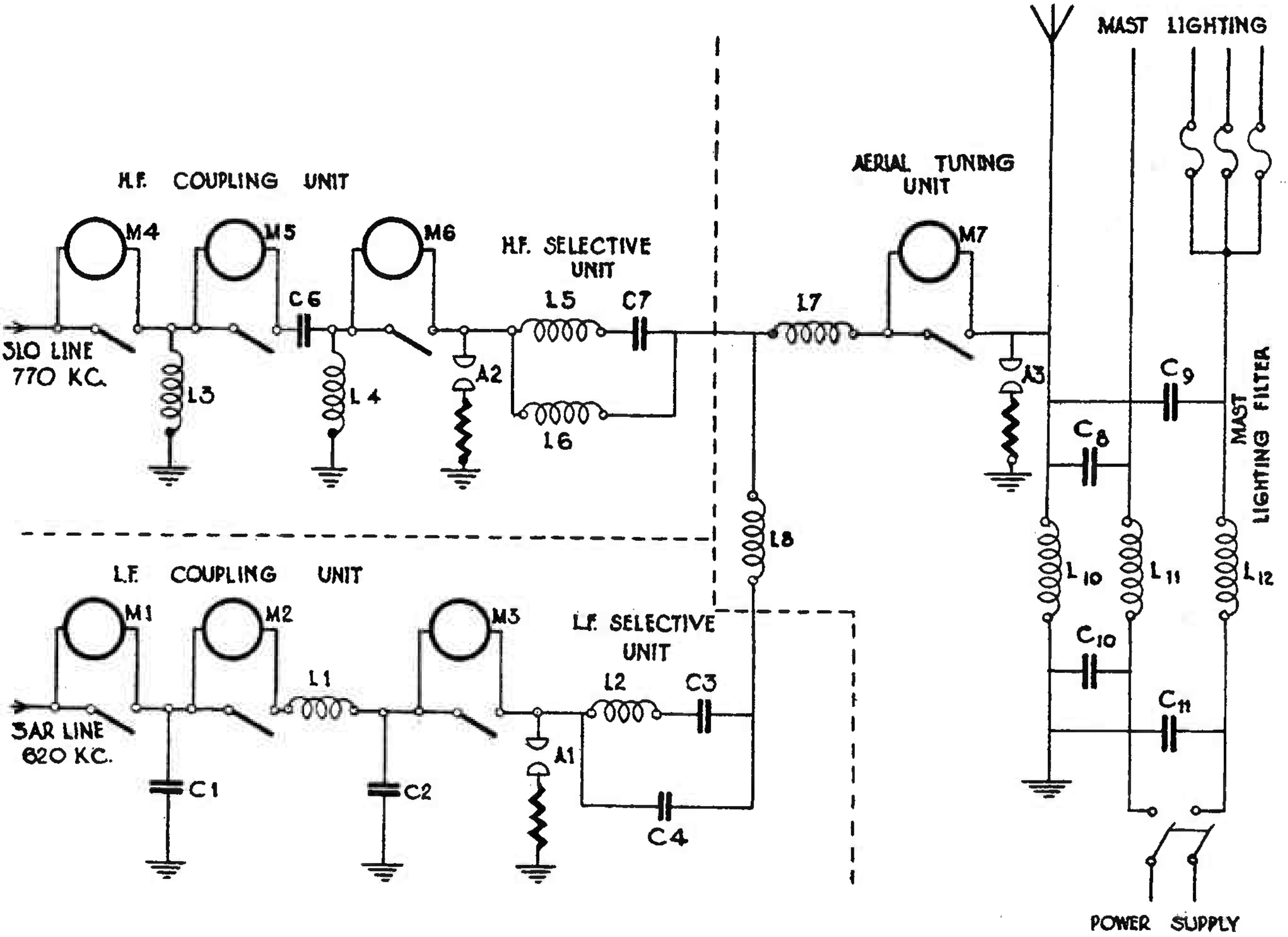

DUAL COUPLING UNIT NATIONAL BROADCASTING STATION.

L3, L4, C6. π Type Coupling Units for matching Transmission Line to Aerial. 770 kc/s.
C1, C2, L1. π Type Coupling Units for matching Transmission Line to Aerial. 620 kc/s.
L5, L6, C7. 770 kc/s Resonant Selective Unit (29,000 ohms at 620 kc/s).
L2, C3, C4. 620 kc/s Resonant Selective Unit (22,500 ohms at 770 kc/s).
L7, L8. Aerial Tuning Units.
A1, A2, A3. Lightning Discharger.

FIG. 10.

Multiple Wire Lines of various forms, both balanced and unbalanced, are sometimes used. Fig. 11 shows cross-sections of typical lines. Applications of the different forms will be referred to later.

(a) 2-Wire Open Line. (b) Coaxial. (c) Balanced Screened Line.

(d) Balanced 4-Wire Line. (e) Unbalanced 6-Wire Line.

TYPICAL TRANSMISSION LINES.

FIG. 11.

7. TRANSMISSION LINE THEORY.

7.1 Although the theory of transmission lines is covered in Long Line Equipment I, it might be as well to refresh it in this Radio Course, since it has very important applications.

Propagation. The conductors forming a transmission line may be regarded as possessing series inductance and shunt capacity uniformly distributed throughout their length. They also possess series resistance and shunt leakage, but these will be neglected in the first stages of this discussion; this approximation is justifiable at radio frequencies.

On applying an e.m.f. to one end of a long transmission line, the first effect is to charge the capacity of that part of the line immediately adjacent to the input terminals. The extension of the charge to more remote parts of the line is delayed by the inductance of the line; but the charge does continue to extend down the line, a charging current flowing from the source of e.m.f. If, at the end of a short interval of line, the e.m.f. is reduced to zero, the current at the input terminals will also fall to zero; but the inductance of the line will again delay the disappearance of the current at more remote points. The initial disturbance will continue to travel down the line in the manner of a wave.

/ It

It will be observed that the disturbance produced in the line by the applied e.m.f. depends only on the e.m.f. and the properties of the line, and not on the impedance in which it is terminated. The disturbance will eventually reach the termination, and some of the energy in it may be reflected and travel back to the input end. If the input voltage is a sustained alternating voltage, the apparent input impedance will depend on the way in which the reflected wave combines with the original wave at the input terminal. This will involve the impedance of the termination. However, considering only the wave travelling forward, the input impedance of the line depends only on the constants of the line. At radio frequencies, where the series inductive reactance per unit length of the line is large compared with the resistance per unit length, if L and C are respectively the inductance and capacity per unit length of the line, the input impedance is for practical purposes a pure resistance of magnitude equal to $\sqrt{L/C}$. This impedance is known as the characteristic impedance of the line.

The velocity of propagation of the wave is also a characteristic of the line, and is equal to $\frac{1}{\sqrt{LC}}$, the same unit of length being used to express the velocity as that for which L and C are given.

The characteristic impedance of a transmission line may be expressed in terms of the geometrical dimensions of the cross-section of the line. For a 2-wire line, the usual expression is -

$$Z_c = \frac{276}{\sqrt{K}} \log_{10} \frac{d}{r} \qquad \text{(See Fig. 11a.)}$$

Here d is the centre to centre distance between conductors, while r is the radius of the conductor section, and K is the dielectric constant of the surrounding medium (for a vacuum, and sufficiently nearly for all gases, $K = 1$). This expression becomes inaccurate when the clearance between the wires is small compared with the wire diameter; an accurate formula for all spacings is -

$$Z_c = \frac{120}{\sqrt{K}} \cosh^{-1} \frac{d}{2r}$$

The first formula is, however, more than sufficiently accurate for all normal wire line construction.

For a coaxial line -

$$Z_c = \frac{138}{\sqrt{K}} \log_{10} \frac{r_2}{r_1}$$

where r_1 is the outside radius of the inner conductor and r_2 is the inside radius of the outer conductor.

/ The

The velocity of propagation depends only on the dielectric, not on the geometry of the line. It is $\frac{300,000,000}{\sqrt{K}}$ metres per second. Changes in the line geometry affect both the inductance and the capacity in such a way that their product remains constant.

The characteristic impedance being a pure resistance of constant value, and the velocity of propagation being constant, the voltage and current observed at any point along the line as the wave passes will be a replica of the input voltage and current delayed by the time taken for the wave to travel from the input end to the point of observation. Also, the current and voltage wave forms will be similar, their magnitudes being related by a constant which is, of course, the characteristic impedance.

Reflection. The relation between voltage and current in the wave travelling forward on the line is given by the characteristic impedance of the line, the relation between voltage and current into the terminating network is given by the impedance of the network. If these impedances are equal, the wave on the line passes into, and is absorbed by, the network without change. If the terminating impedance is not equal to the characteristic impedance of the line, the incident wave alone cannot maintain a voltage and current equal to those at the termination. In order to make the line voltage and current equal to those at the termination, there appears in the line, superimposed on the incident wave, a second wave travelling in the opposite direction, that is, a reflected wave. The voltage and current in the reflected wave are also related to one another by the characteristic impedance of the line; but the phase relation between them is opposite to that in the incident wave. If the impedance of the termination is Z_t, the voltage of the incident wave V_i; and the voltage of the reflected wave V_r, then -

$$\frac{V_r}{V_i} = \frac{Z_t - Z_c}{Z_t + Z_c}.$$

If the terminating impedance is reactive, then Z_t will be a complex number; the above expression will then indicate the phase relation between the incident and reflected voltages at the end of the line as well as the ratio of their amplitudes.

On shifting our point of observation back towards the input end of the line, the phase of the voltage of the incident wave will appear to advance, while that of the reflected wave will appear to be retarded. Thus, we will find points where the two are in phase with one another, and also points where they are oppositely phased. The line voltage is the resultant of the two wave voltages; in the first case, the amplitude of the line voltage will be the sum of the amplitudes of the wave voltages, while, in the second case, it will be their difference.

/ At

At intermediate points, the line voltage will have an intermediate value. Under these conditions the line is said to carry a standing wave. Between two points, half a wavelength apart, the phase of the incident voltage advances 180°, while that of the reflected voltage is retarded by 180°. The relation between the two is changed by 360°, which is equivalent to no change. Thus, the standing wave pattern of voltage distribution along the line repeats itself at half wavelength intervals. The line current varies in a similar manner, but, at points where the wave voltages are in phase and the line voltage a maximum, the wave currents will be opposite in phase and the line current a minimum.

Where the line is terminated by an open circuit, a short circuit or a pure reactance, the termination absorbs no energy from the incident wave. The amplitude of the reflected wave must, therefore, equal that of the incident wave; the minimum values of line voltage and line current in the standing wave pattern will then both be zero. Also, once the standing wave has been established after applying the input voltage, the line can draw no energy from the source; its input impedance will then be a pure reactance, unless the input terminals coincide with a point of either zero voltage or zero current; then the line will present the equivalent of a short circuit or an open circuit respectively to the source.

Fig. 12 is a diagram of typical standing wave current patterns corresponding to typical terminating impedances.

R LESS THAN Z_c

(a)

R GREATER THAN Z_c

(b)

(c)

(d)

TYPICAL STANDING WAVE CURRENT PATTERNS.

FIG. 12.

It will be seen how the nature of the terminating impedance - high or low, inductive or capacitive - can be deduced from the location of current maxima or minima relative to the termination.

Attenuation. So far, the effect of loss in the line has been neglected. It will be obvious that loss will always occur; it is not possible to construct a line whose conductors have no resistance. If a line is terminated in its characteristic impedance so that there is no reflected wave, then, if the current at a certain point in it is I, the power transmitted will be I^2Z_c; the power dissipated in a short section of loop resistance R will be I^2R. The transmitted power, and, consequently, the line current, will decrease from the input to the termination. The attenuation in db of a transmission line (assuming copper loss only) is given by -

$$\frac{4.34R}{Z_c}$$

where R is the loop resistance of the line. It must be remembered that R is the resistance at the operating frequency, not the D.C. resistance.

Where the line terminating impedance is not equal to the characteristic impedance, the incident wave is attenuated as it travels forward, and the reflected wave is again attenuated as it travels back. Thus, the standing wave ratio (ratio of maximum to minimum line current) will be greater near the termination than near the input end of the line. The total power lost in the line is the sum of the losses from the incident and the reflected wave; the power transferred to the termination is the difference between the power in the incident wave and that carried by the reflected wave. Hence, in order that the power lost may be a minimum, there should be no reflected wave; the line should be terminated in its characteristic impedance.

Fig. 13 shows variation of resistance with frequency of various line wires.

/ Fig. 13.

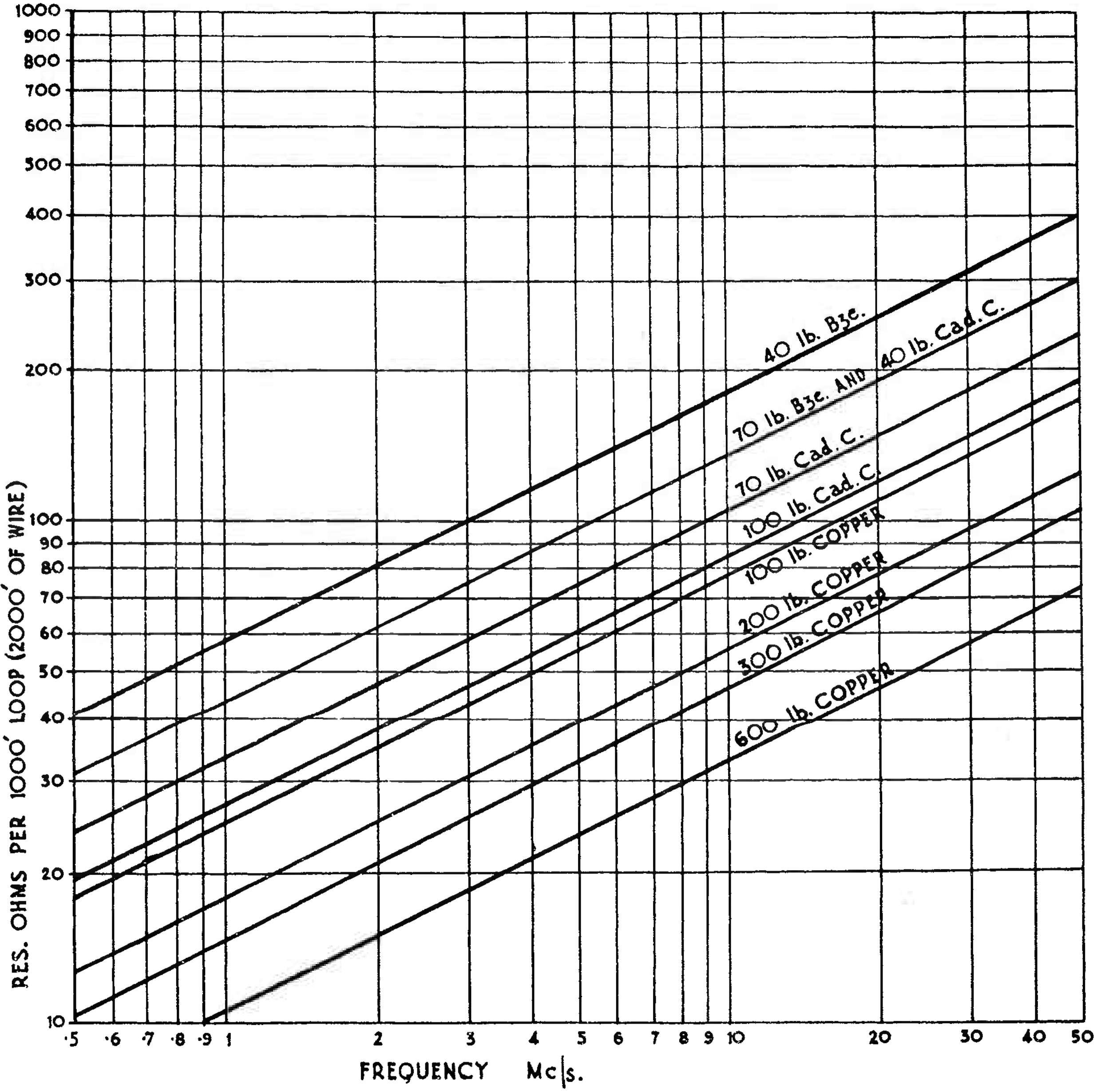

RADIO FREQUENCY RESISTANCE OF VARIOUS LINE WIRES.

FIG. 13.

8. APPLICATIONS OF TRANSMISSION LINES.

8.1 (i) To transmit power from one point to another.
(ii) Shorted or open sections are used as inductance or capacity elements in circuits.
(iii) As impedance transformers.
(iv) For impedance measurement.

8.2 In addition, resonant sections of line are sometimes used to prevent power from being transmitted from one point to another. The choice between types of line depends on practical considerations. In most cases, the choice will be between a 2-wire open line and a coaxial line. Considerations of convenience in relation to other parts of the system play a part; for instance, where the output circuit of a high-frequency transmitter and the aerial system are both balanced, the balanced line is the obvious choice from this viewpoint. Other considerations are -

The coaxial line is completely screened, and the outer conductor may be earthed. Proximity to the ground or other objects causes no extra losses. In the case of the open wire line, losses, either eddy current or dielectric, may occur in nearby objects.

For a given loss, the open wire line contains less copper; it is also easier to construct and, therefore, cheaper than the coaxial line. The open line is easier to repair in the event of a failure.

The balanced screened line is used where both screening and balanced operation are essential. At Shepparton, the sections leading from the transmitter terminals to the outside wall of the building are of this type.

Multiple wire lines are sometimes used for high-power work, as at Shepparton; owing to their low characteristic impedance in comparison with the 2-wire line, the operation voltage will be lower, and, consequently, there will be less risk of corona discharges leading to destructive arcing.

The 6-wire line shown in Fig. 11e has been proposed for use at medium frequencies as a cheap substitute for a coaxial line.

Line applications other than simple transmission of power are almost entirely restricted to fairly high frequencies, where the lengths involved are manageable. A variety of applications may be seen in the impedance matching procedure known as the stub method. This procedure has been described.

/ 9.

9. TEST QUESTIONS.

1. What is a "standing wave" and what is the reason for its formation? Has it an adverse effect on the performance of a radio transmitter?

2. Briefly explain the principles of "stub" matching as applied to the connection of an aerial to a transmission line.

3. Give a sketch and a brief explanation of a type of coupling to suit -

   (i) Non-resonant aerial.

   (ii) Resonant aerial.

4. Give the formula for calculating the characteristic impedance of -

   (i) Concentric or coaxial cable transmission line.

   (ii) 2-wire open line.

5. State some practical uses of transmission lines.

6. Using No. 8 S.W.G., design a 2-wire transmission line to have a characteristic impedance of 200 ohms.

END OF PAPER.

COMMONWEALTH OF AUSTRALIA.

Chief Engineer's Branch,
Postmaster-General's Department,
Treasury Gardens,
Melbourne, C.2.

COURSE OF TECHNICAL INSTRUCTION.

RADIO II.

PAPER NO. 4.
PAGE 1.

AERIALS FOR HIGH FREQUENCY TRANSMISSIONS.

CONTENTS:

---

1. INTRODUCTION.

1.1 Radiators for medium-wave services have been discussed and we come now to those used for short-wave services. The primary difference is that radiation is required to take place at angles between 7° and 30° from the horizon, in lieu of along the surface

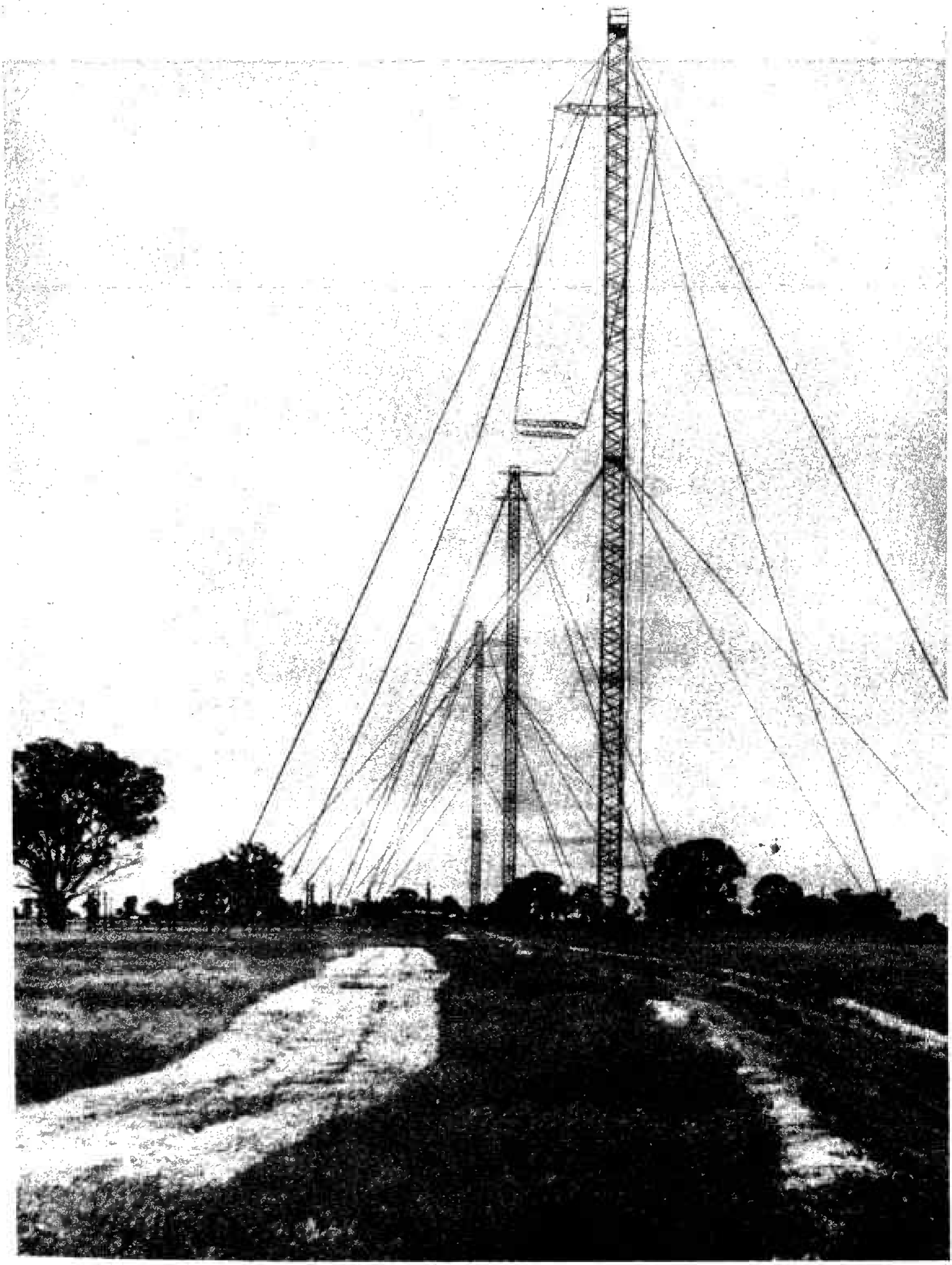

TYPICAL AERIAL ARRAYS.
"RADIO AUSTRALIA."

of the ground. It is also usually required to make short-wave transmissions directive to certain areas instead of radiating omnidirectionally, as is usually the case with medium waves. We may sum up the requirements of short-wave transmitters as follows -

(i) Radiation at angles from the horizon.
(ii) Minimum ground wave radiation.
(iii) Directive transmissions.
(iv) As good an average depth of modulation as possible to improve signal to noise ratio.
(v) Facilities for radiating on different frequencies as required by varying propagation conditions.

(i), (ii) and (iii) may be accomplished by aerial design, (iv) by equipment design and (v) by both aerial and equipment design.

The principles of current distribution and the effect of the earth on the radiation pattern were discussed in Paper No. 2. A half-wave dipole (either vertical or horizontal) would be regarded as the basic aerial for high-frequency transmission, the chief developments being the arrangement of these in tiers and groups to produce certain radiation effects, particularly as regards directivity and gain. If we can obtain 3 db gain in a given direction it is equivalent to doubling the transmitter power, and if we are using powers of the order of 5 or 10 kW the economic advantage is thus appreciable.

2. DEFINITIONS OF TERMS USED IN AERIAL DESIGN.

2.1 **Aerial Array.** An aerial array is a system of aerials coupled together for the purpose of obtaining directional effects, or, alternatively, an aerial array is an arrangement of aerials so spaced and phased that the fields radiated from the individual aerials composing the array tend to add in some preferred direction and to cancel in other directions. It is possible in this way to obtain very great directivity and consequent large aerial gain.

Note. When the unit aerials are arranged in a line perpendicular to the direction of transmission, it is called a broadside array; when arranged in the direction of transmission it is called an end-fire or alignment array (see Fig. 1).

FIG. 1. BROADSIDE ARRAY.

Tier Array. A tier array is an array of aerial elements, one above the other.

Reflector. A reflector is a rear portion of a directional aerial, not connected to the transmitter or receiver, designed to increase the effectiveness in the forward direction.

Director. A director is a front portion of a directional aerial, not connected to the transmitter or receiver, designed to increase the effectiveness in the forward direction.

Periodic Aerials. Periodic aerials are those in which the impedance varies with frequency due to reflections or standing waves within the aerial system. Resonant aerials of all kinds are periodic aerials.

Aperiodic Aerials. Aperiodic aerials are those designed to have a constant impedance over a wide range of frequencies due to suppression of reflections within the system. These include terminated wave aerials and rhombic aerials.

Wave Angle. A wave angle is an angle at which a wave arrives or is propagated. The two wave angles are the azimuth angle and the elevation angle, the former usually being expressed as the Great Circle Bearing in degrees from north, the latter in degrees above the horizontal plane.

Gain. Gain is usually expressed in db relative to a standard reference aerial, and may be defined as follows - "The ratio, expressed in db, of the power that must be supplied to a standard comparison aerial to the power that must be applied to the directional system to give equal field intensity at a distant point." Since the radiation characteristics of a half-wave aerial are readily calculated, it is customary to use this type of aerial as the reference aerial. It is considered as being at the same height above ground and in the same plane as the aerial being measured. In the case of arrays, the height is taken as being the centre of the directional system.

Directivity. The term directivity is used to express the "sharpness" of the radiation pattern in either the vertical or horizontal plane. It may be defined as relative to the radiation pattern as follows - "The directional pattern of an aerial is the polar characteristic which indicates the intensity of the radiation field at a fixed distance in different directions in space."

The patterns are usually plotted on "polar co-ordinate" paper, which will be discussed later.

3. AERIAL ELEMENTS.

3.1 There is possible a large number of arrangements of aerial elements, and discussion, therefore, must be restricted to some typical designs. Those that will be dealt with comprise -

Periodic.

Colinear arrays.
Broadside arrays.
End-fire arrays.
Fish-bone arrays.
Parasitic arrays.

Aperiodic.

Long wire.
Rhombic.

Receiving Aerials.

Aerials for Low-Frequencies.

Colinear Array. A colinear array is one in which the half-wave aerial elements are arranged in line (linearly). They may be either horizontally or vertically arranged as in Fig. 2.

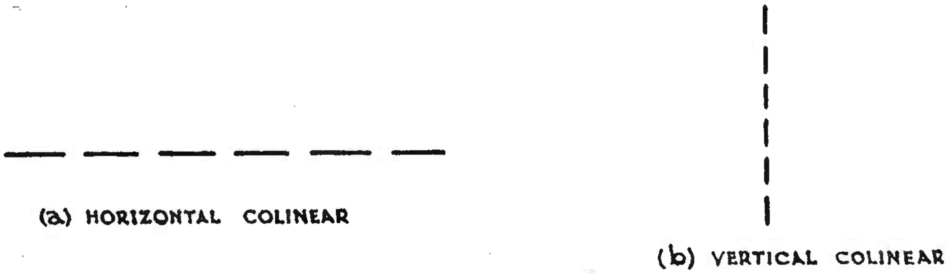

COLINEAR ARRAY.

FIG. 2.

Colinear elements are excited in phase. Maximum radiation is broadside to the axis and is modified by the earth as in the case of a single element.

For wavelengths greater than 10 metres (frequencies below 30 Mc/s), a limited use only is made of the array of Fig. 2b, since the height of the poles required makes such a system uneconomical, and good directivity and gain may be obtained from arrays made up of horizontal elements.

/LYNDHURST

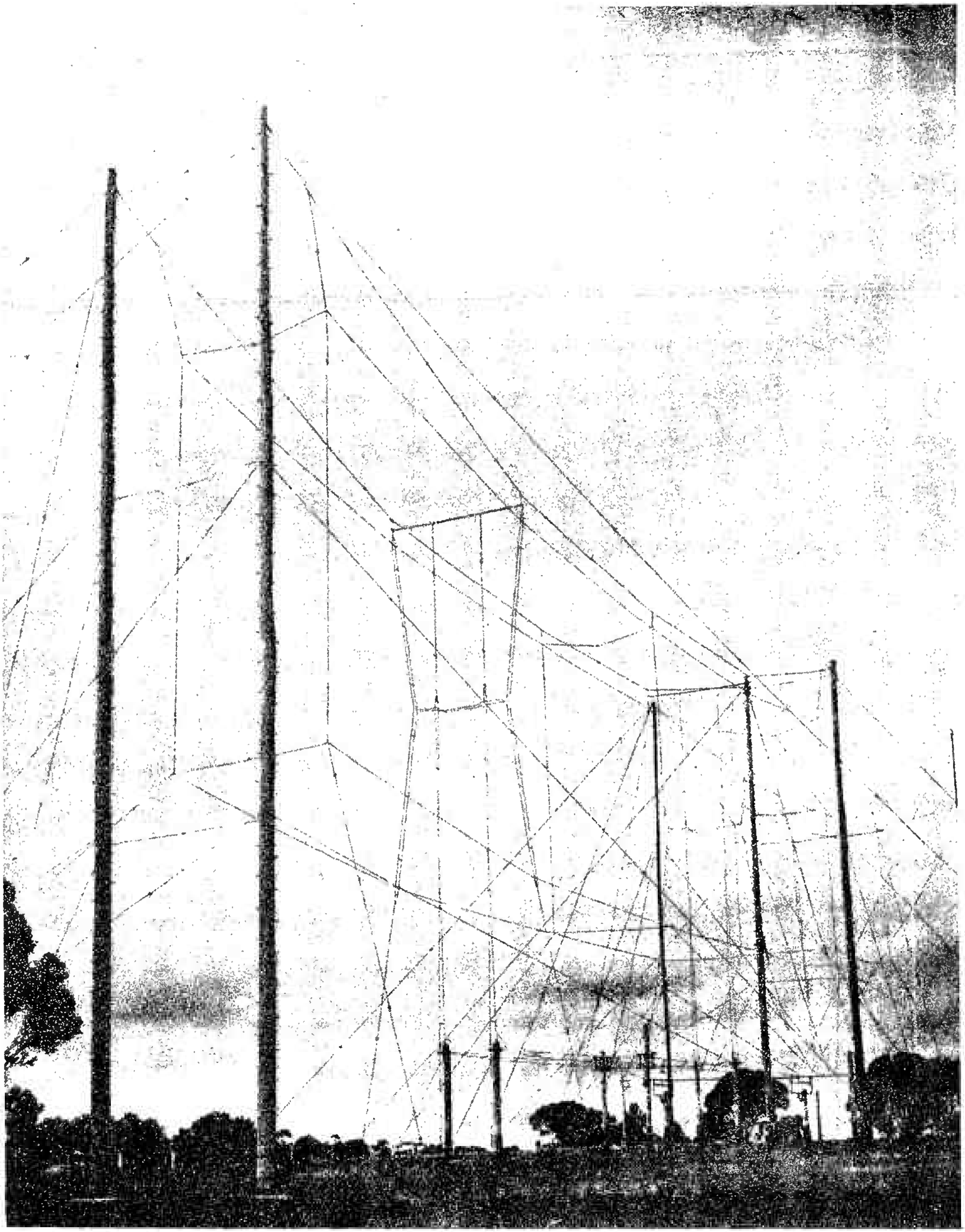

LYNDHURST H.F. STATION.
3 FREQUENCY ARRAY. 9-11-15 Mc/s.

Fundamental horizontal colinear arrays are shown in Figs. 3a, 3b and 3c, together with their broadside radiation patterns. (The vertical plane pattern will be the same as a half-wave element at the same height.)

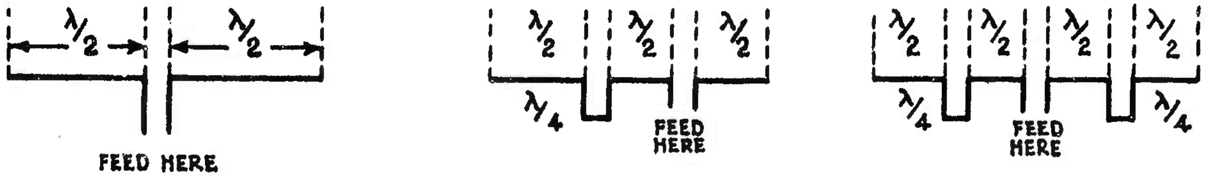

(2 ELEMENTS) (a)

(3 ELEMENTS) (b)

(4 ELEMENTS) (c)

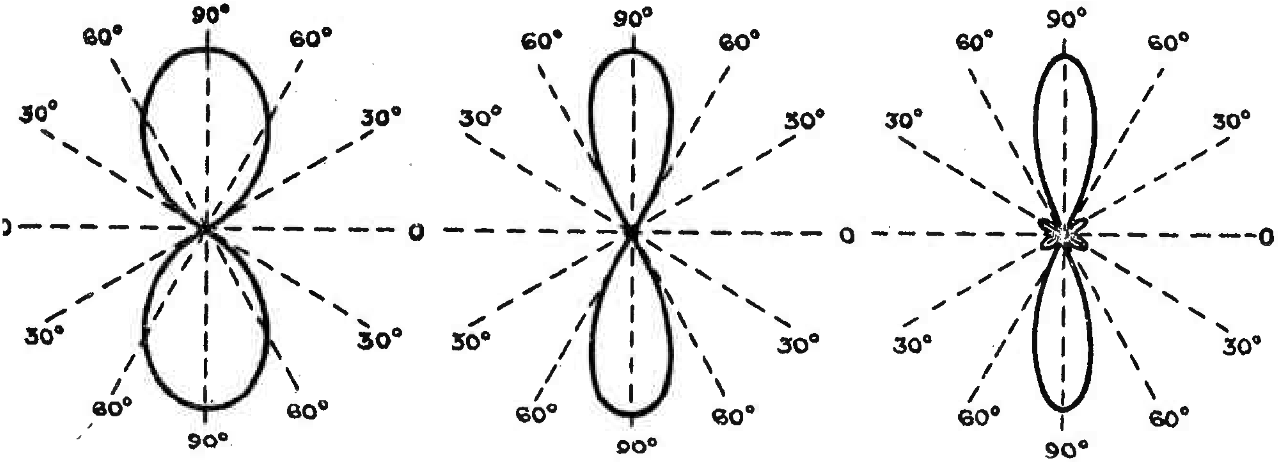

BROADSIDE RADIATION PATTERNS OF HORIZONTAL COLINEAR ARRAYS.

FIG. 3.

The sharpening of the directional characteristic associated with the increase in the number of elements should be noticed. The quarter-wave phasing sections are necessary between the half-wave elements, in order that the radiation from each element will be in phase and add in the desired direction.

Adding elements in the horizontal direction, as above, has the effect of sharpening the directive pattern in the horizontal direction, thus also increasing the gain.

Fig. 4 is the vertical version of Fig. 3, "h" being the height to the centre of the array. The effect is to sharpen the vertical pattern (lower angle of radiation), but the horizontal pattern is the same as that of a single vertical element. (As mentioned above, to get satisfactory

satisfactory heights "h" is not always economical for the case of Fig. 4b, although Fig. 4a is a useful aerial.)

Broadside Arrays. The gain and directivity of broadside arrays depends on the number of elements and the spacing. Half-wave spacing is generally used to simplify the feeding problem when more than two elements are involved. Broadside arrays can be used with either vertical or horizontal elements, the difference being -

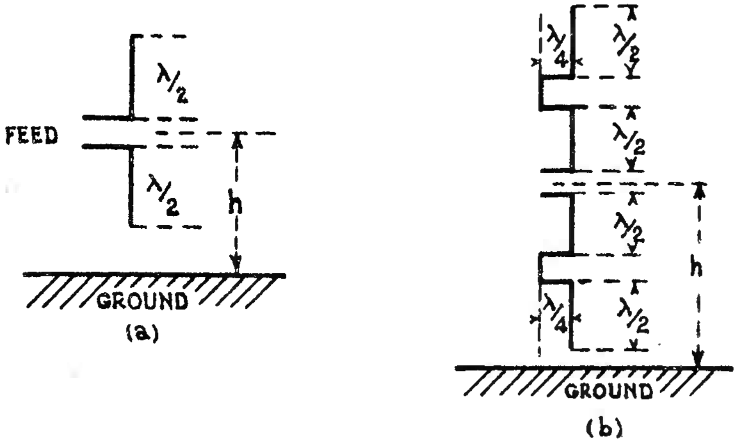

FIG. 4. VERTICAL COLINEAR ELEMENTS.

(i) Vertical. Horizontal pattern is sharp. The vertical pattern is same as for one element, and depends on the height above earth (see Fig. 5a)

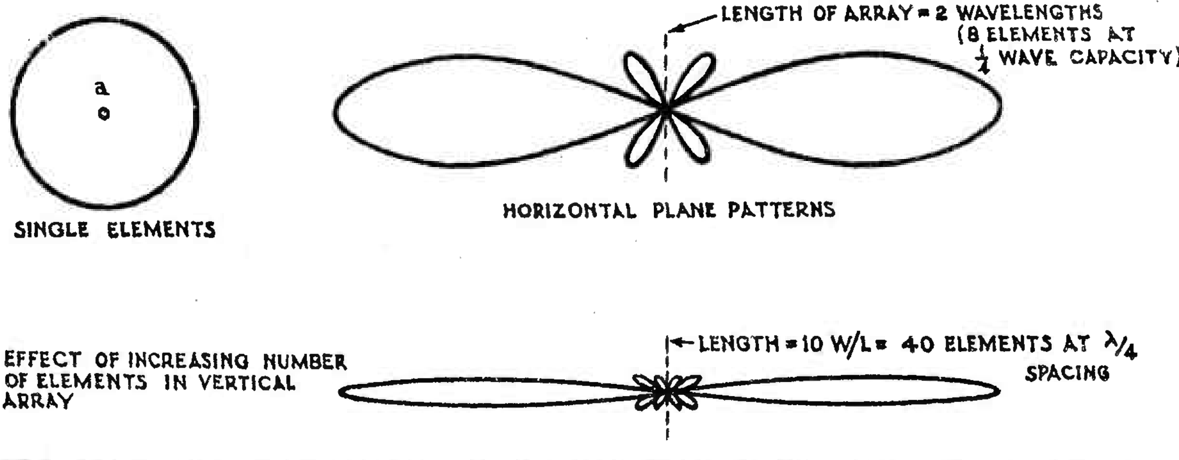

(a) Vertical.

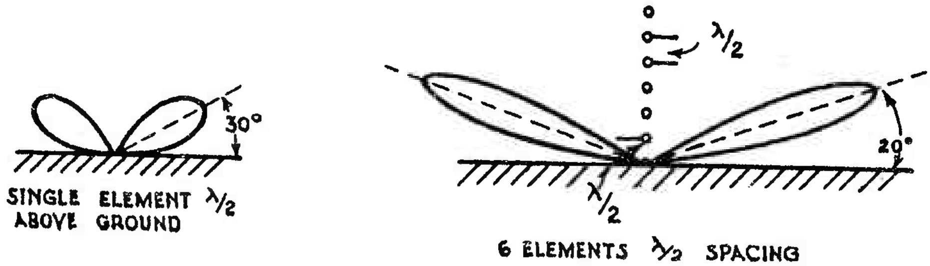

(b) Horizontal.

FIG. 5. VERTICAL AND HORIZONTAL PATTERNS.

(ii) Horizontal. Pattern is sharpened in vertical plane, giving low angle radiation. Horizontal plane pattern is the same as for single element at the same height (see Fig. 5b).

4. REFLECTORS.

4.1 Before discussing practical arrays the use of a reflector will be discussed, since it is only in a few instances that a transmitting array will be used without a reflector.

Fig. 6a shows the horizontal plane pattern of a vertical half-wave aerial. If a second similar aerial is placed near the first and fed in phase, the pattern will be modified according to the spacing, as shown in Fig. 6b for several spacings. If the phasing of the currents is varied, many different results may be obtained, according to the amount of phase difference. Since 90° phasing is the most convenient, let us consider the effect of feeding the second aerial b 90° out of phase with the first aerial a.

Fig. 6c shows this effect with two spacings, and it is apparent that a second aerial spaced a quarter wavelength behind the first and fed 90° lagging on the first produces a practically unidirectional pattern. The pattern of Fig. 6c can be produced without actually energising b, for if aerial a is excited, a current will be induced in b which will lag 90° behind the current in a, provided the spacing is a quarter wavelength. The angle of lag will vary according to the spacing, but a 90° lag simplifies feeding and gives a good directional pattern.

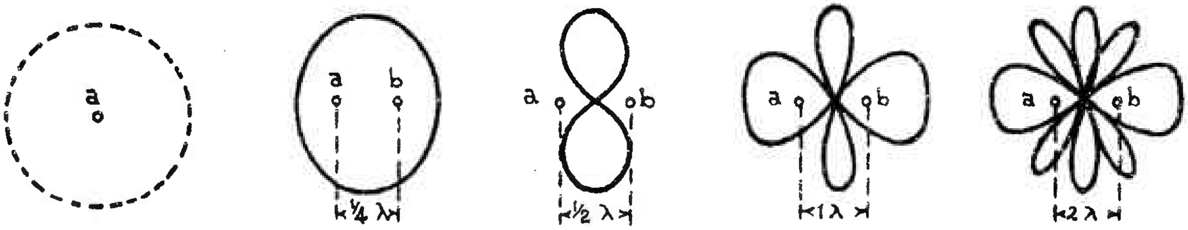

Horizontal pattern without reflector.

(b) Patterns for two in-phase aerial with the spacings shown.

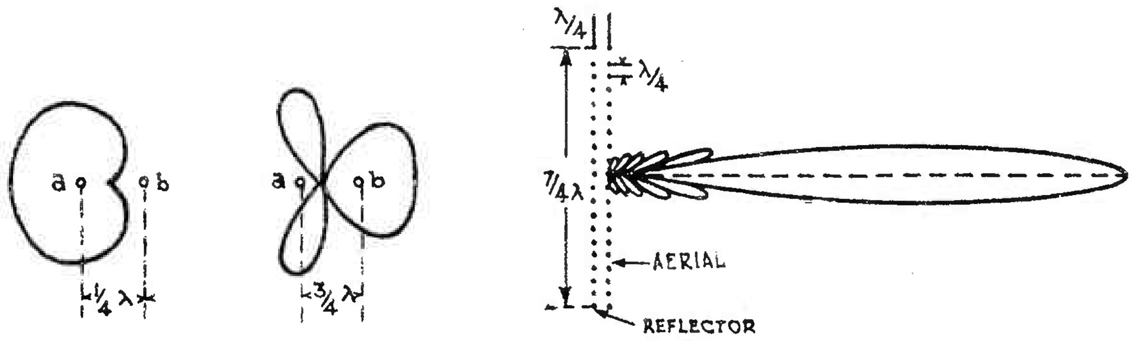

(c) Patterns when a and b are fed 90° out of phase.

(d) Horizontal directional pattern for array and reflector of 24 aerials spaced a quarter wavelength.

FIG. 6. PATTERNS FOR AERIALS.

Thus, by placing behind an aerial array a reflector, which is a duplicate of the array, and spacing it a quarter wavelength away, the transmitted signal may be made unidirectional. It also is equivalent to doubling the transmitter power, the power gain due to the use of a reflector being 3 db.

An aerial array, therefore, usually consists of a number of spaced aerials backed by a similar row of reflectors giving a sharply defined beam in a direction perpendicular to the line of the array. Fig. 6d shows the horizontal directional pattern of an array composed of 24 vertical elements spaced a quarter wavelength and backed by a similar reflecting structure having the same spacing.

5. PHASING.

5.1 When an array is being used it is necessary that the currents in all the radiating elements be in correct phase relationship, so that the radiated signal will possess maximum gain and directivity. Fig. 7a shows the principle of phasing. Two half-wave elements are phased by the quarter-wave action C. Consider a portion of an A.C. wave A B C. If the wire were continuous, as in Fig. 7b, the negative halves of the wave C would tend to cancel the positive halves A and B, and there would be no radiation from the wire. If we cut the wire into half-wave sections, as in Fig. 7a, and join each section by a closely spaced phasing section C a quarter wavelength long, the undesired half-wave will be in section C and, due to the length and closeness of the latter, the quarter-waves X and Y will cancel out, leaving only effective the required half-waves A and B. This process may be continued for a number of colinear elements. Another way of looking at it is from the transmission theory aspect. The outer ends of the half-wave sections possess a high impedance, and the inner ends due to their proximity, possess a low impedance which effectively absorbs the undesired half-wave.

Consider now the effect of "stacking" elements as in Fig. 7c, which consists of two sets of half-wave elements spaced vertically one half-wave apart. In this case the quarter-wave section is not required, but is replaced by the transposed feeders ab and cd. Examination of these will show that currents of opposite polarity are flowing across these and will thus cancel, and, since these are each a half-wave long, the undesired half-waves are eliminated from the radiating system. If the transposition were omitted Fig. 7c would become Fig. 7d, and it will be seen that the upper and lower colinear elements are in opposition and no radiation would be effected since cancellation would occur.

/Fig. 7a.

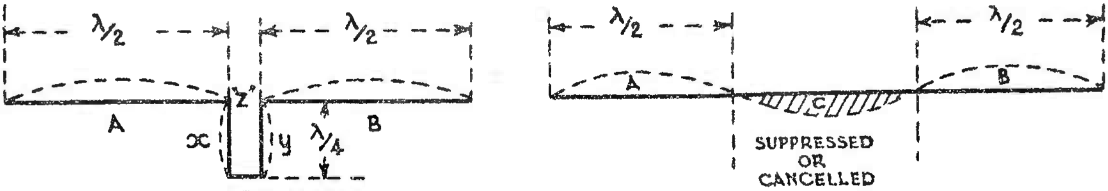

(a) Principle of Phasing. (b) With Continuous Wire.

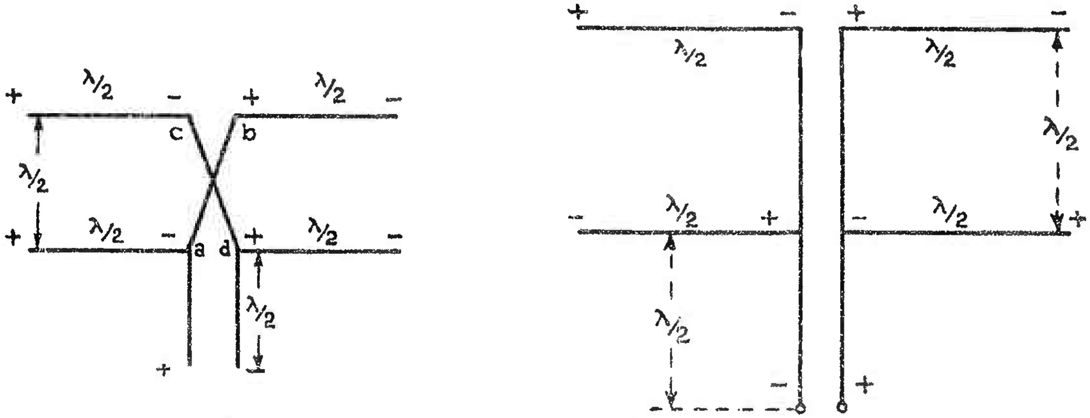

(c) Stacking Elements. (d) Alternative for (c).

FIG. 7. PHASING.

This principle may be applied to multi-element array as shown in Fig. 8.

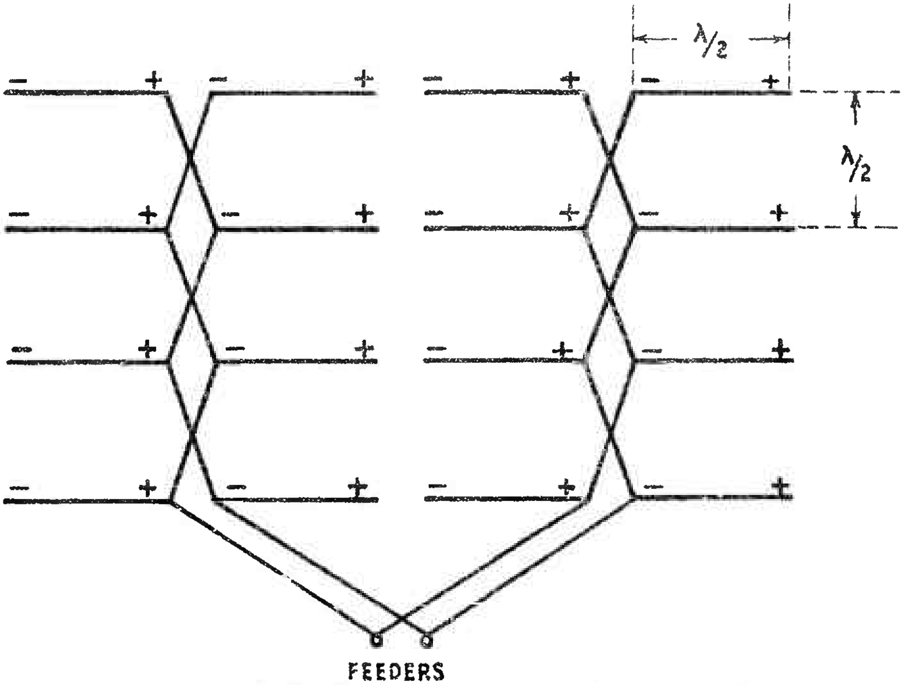

FIG. 8. PHASING OF A STACKED HORIZONTAL ARRAY.

6. PRACTICAL BROADSIDE ARRAYS.

6.1 From what has just been written, it may be seen that an aerial array may be composed of a number of half-wave elements arranged in a combination of vertical and horizontal groups, forming what is known as a "curtain." Fig. 9 shows a typical array composed of 16 horizontal half-wave elements arranged in four horizontal rows and four stacks. A reflector is added behind to improve the characteristics.

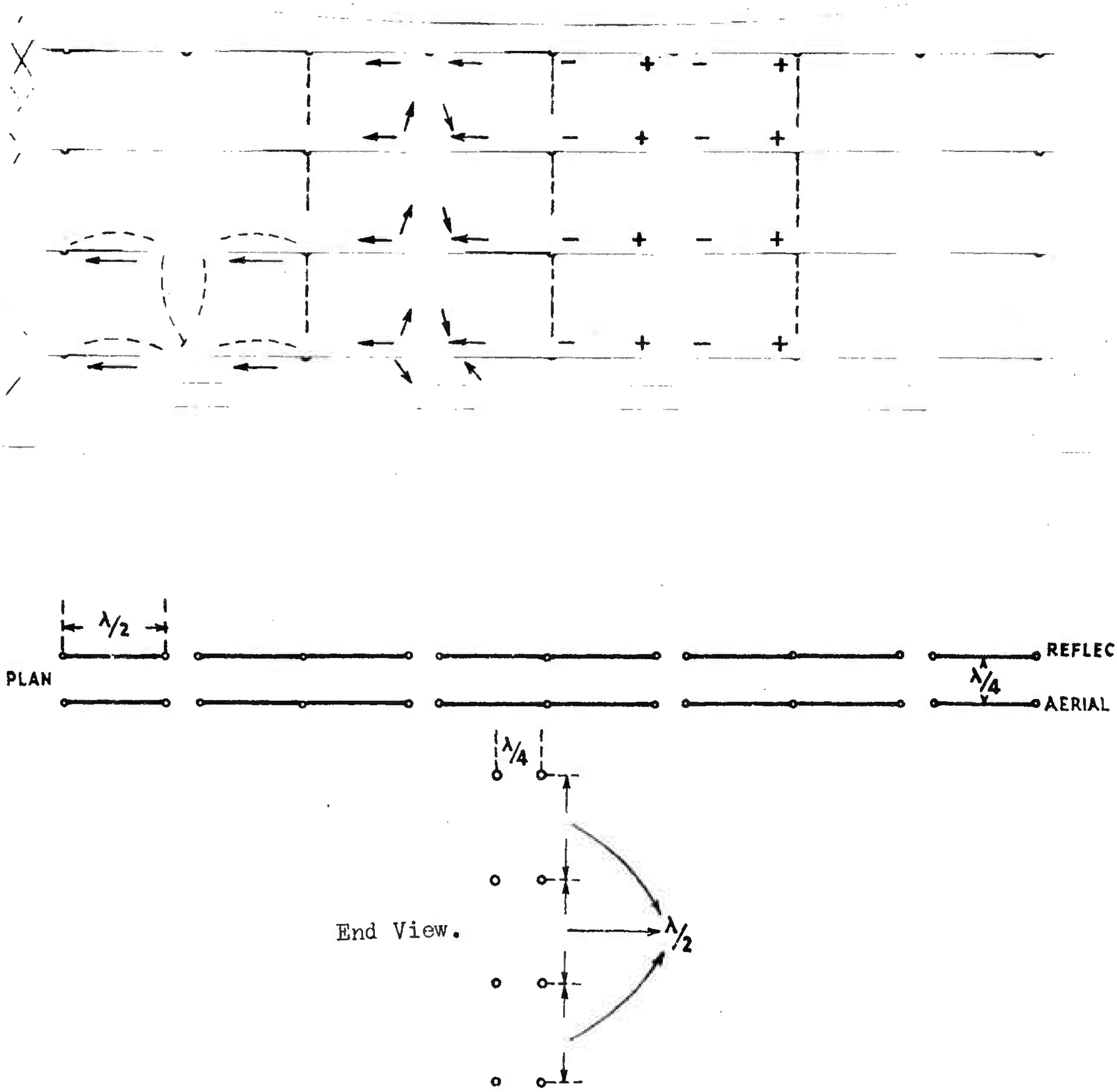

FIG. 9. HORIZONTAL HALF-WAVE AERIAL ARRAY WITH REFLECTOR.

Fig. 10 shows an array composed of vertical dipoles, and also has a reflector behind it.

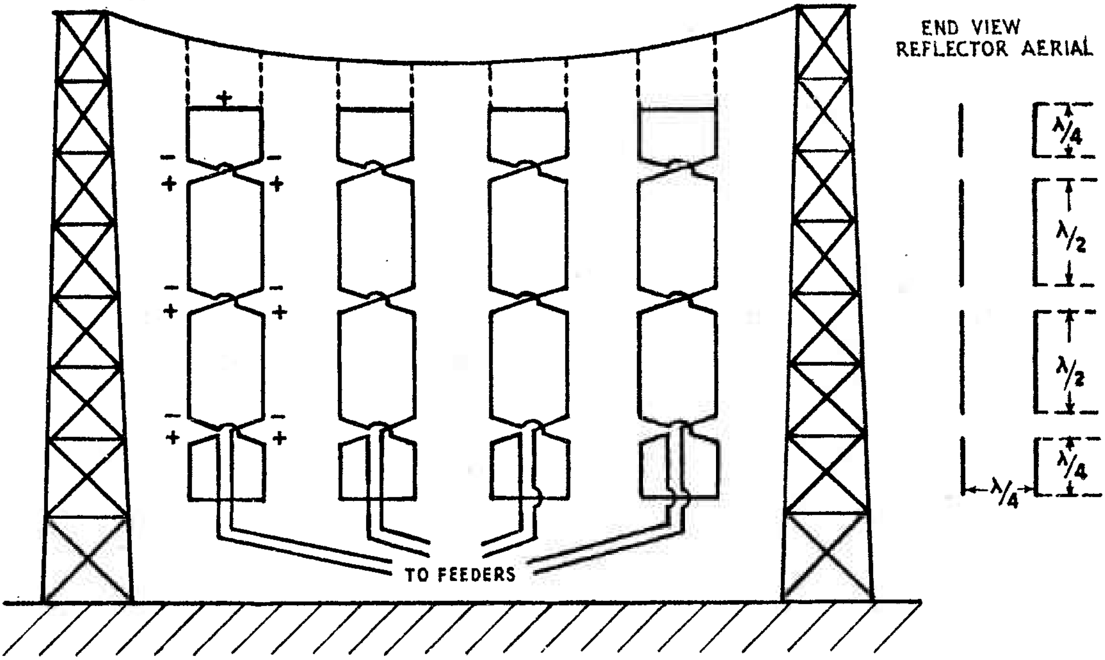

VERTICAL BROADSIDE ARRAY. (REFLECTOR λ/4 BEHIND.)

FIG. 10.

Approximate Rules Concerning Arrays.

Doubling the number of elements colinearly (that is, horizontally in Fig. 9, vertically in Fig. 10) increases gain by 3 db.

Doubling the "stacking" (vertically in Fig. 9, horizontally in Fig. 10) increases gain by 2 db.

Addition of reflector increases gain by 3 db.

Thus, if a 2-element horizontal array had a gain of 3 db, the addition of a similar element above would give it a total gain of 5 db. If, however, this unit were duplicated, the gain would then be 8 db, and, if a reflector were added, the total would be 11 db above the reference level, or 8 db above the 2-element unit (see also Fig. 11).

/FIG. 11.

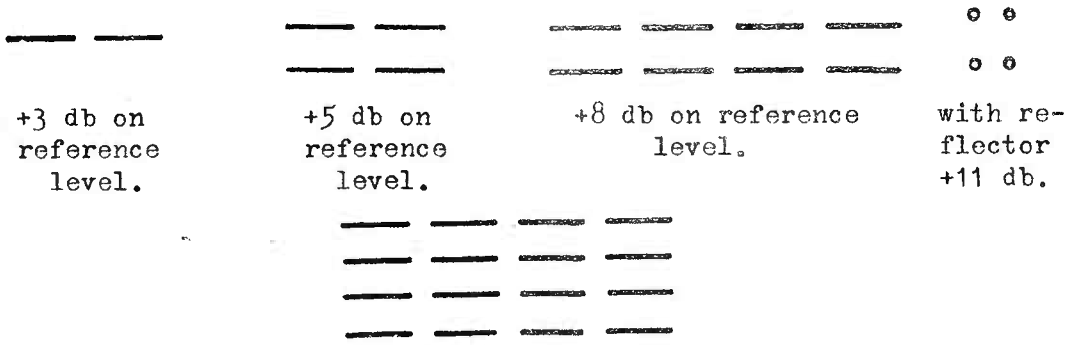

+3 db on reference level.

+5 db on reference level.

+8 db on reference level.

with reflector +11 db.

+10 db (and with reflector +13 db.)

FIG. 11. INCREASING THE GAIN.

7. END-FIRE ARRAYS.

7.1 The end-fire array consists of a number of identical aerials arranged along a line, carrying equal currents excited so that there is a progressive phase difference between adjacent aerials equal in c/s to the spacing between these aerials in wavelengths. Thus, if adjacent aerials are a quarter wavelength apart, a phase difference of 90° is called for. The radiation is concentrated in a unidirectional beam coinciding with the line of the array, and is directed towards the end in which the phase lags when the spacing between the elements is an odd number of quarter wavelengths and the phasing is an odd number of quarter periods. When the spacing and phasing are both an even number of quarter wavelengths and quarter periods, a bidirectional characteristic is obtained.

The beam is much broader than that for a broadside array of the same total length. It improves as the total length of the array is increased, but at a much slower rate than with the broadside array. The directivity in the vertical plane is similar to the horizontal pattern. Fig. 12 compares the horizontal plane directional pattern of a broadside array and an end-fire array having the same total length and similar spacing and size of elements.

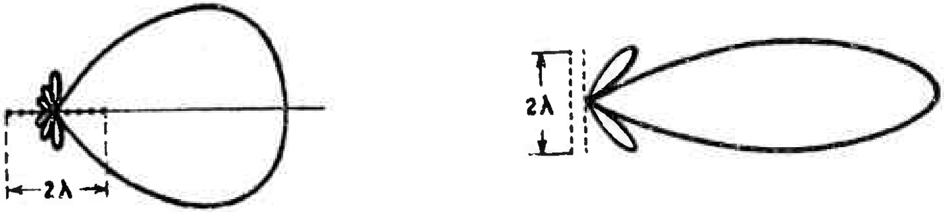

(a) End-Fire Array.

(b) Broadside Array.

COMPARISON OF DIRECTIONAL PATTERNS.

FIG. 12.

Fig. 13 shows the effect of array length of an end-fire array with λ/4 element spacing and element length of λ/2, while Fig. 14 shows the effect of various element spacing with elements of λ/2 length and an array length of 3λ.

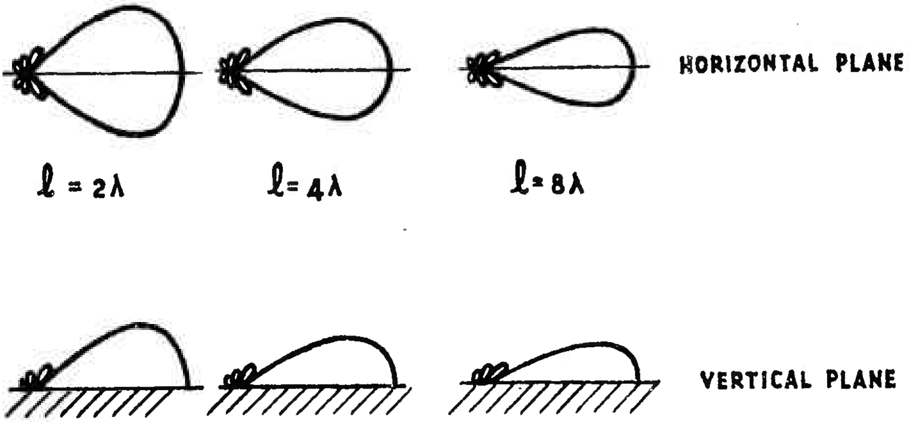

EFFECT OF DIFFERENT ARRAY LENGTHS WITHOUT ALTERING ELEMENT SPACING (λ/4) OR LENGTH (λ/2). END-FIRE ARRAYS.

FIG. 13.

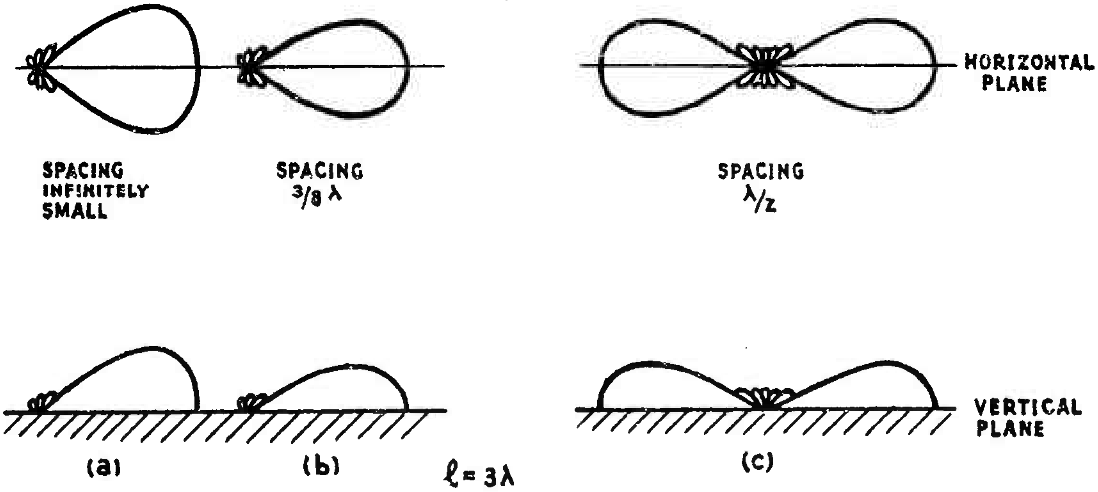

EFFECT OF DIFFERENT ELEMENT SPACING, KEEPING TOTAL LENGTH OF ARRAY CONSTANT, AND ELEMENTS ALL OF THE SAME LENGTH (λ/2).

FIG. 14.

This type of array is of use in locations where space might not permit the erection of a broadside array, otherwise the broadside has some advantage as regards gain and directivity.

/20 kW

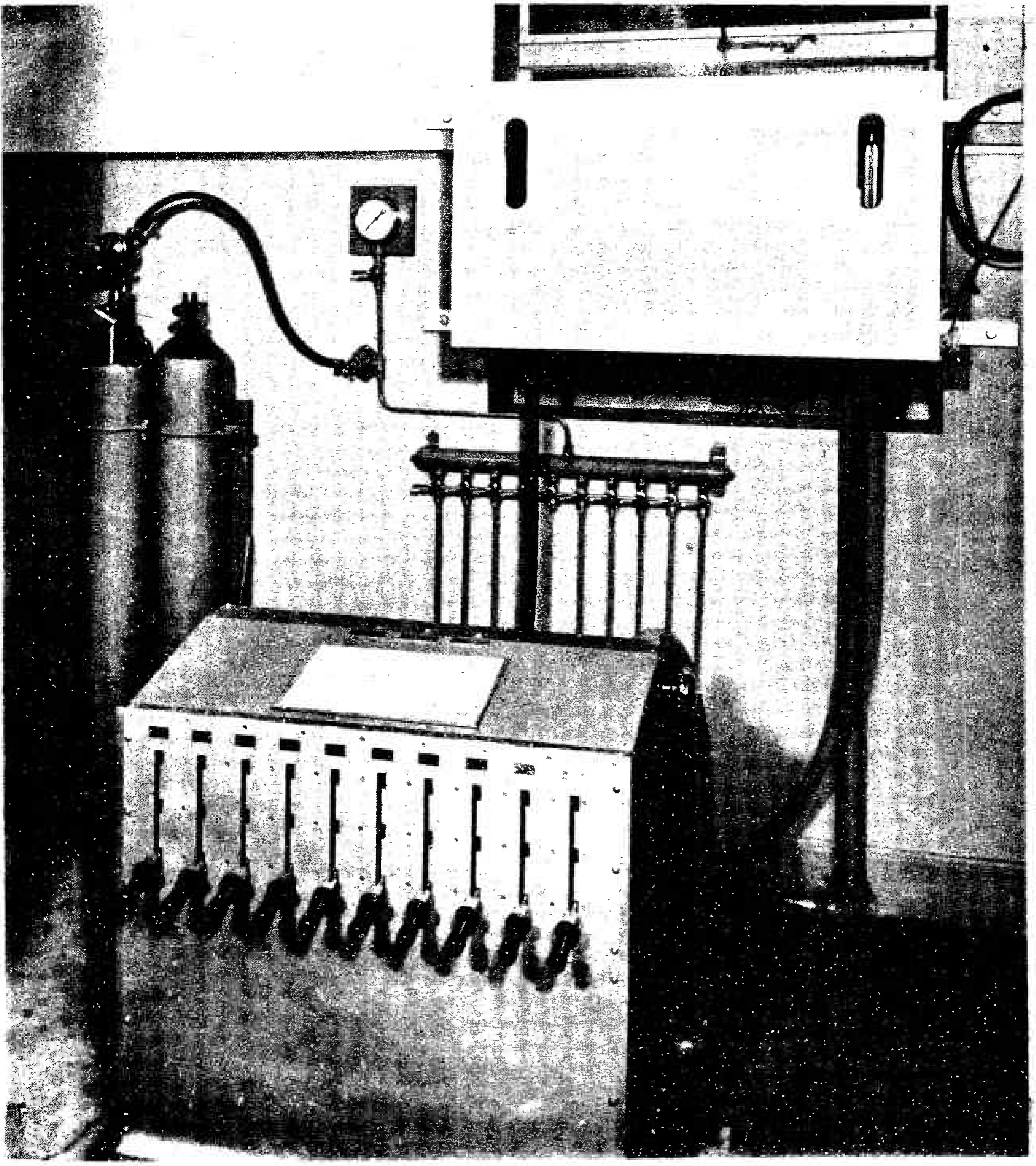

20 kW H.F. TRANSMISSION LINE SWITCHING UNIT AND ARTIFICIAL AERIAL. (S.T.C.)

8. FISH-BONE ARRAYS.

8.1 A fish-bone aerial, so called from its apparent resemblance to the backbone of a fish, is illustrated in Fig. 15. It is a special form of end-fire array in which the necessary phase relations are maintained by a non-resonant line. The outstanding characteristics of a fish-bone aerial are its ability to operate over a considerable band of frequencies without any readjustment whatsoever, and the smallness of the minor lobes in its directional pattern.

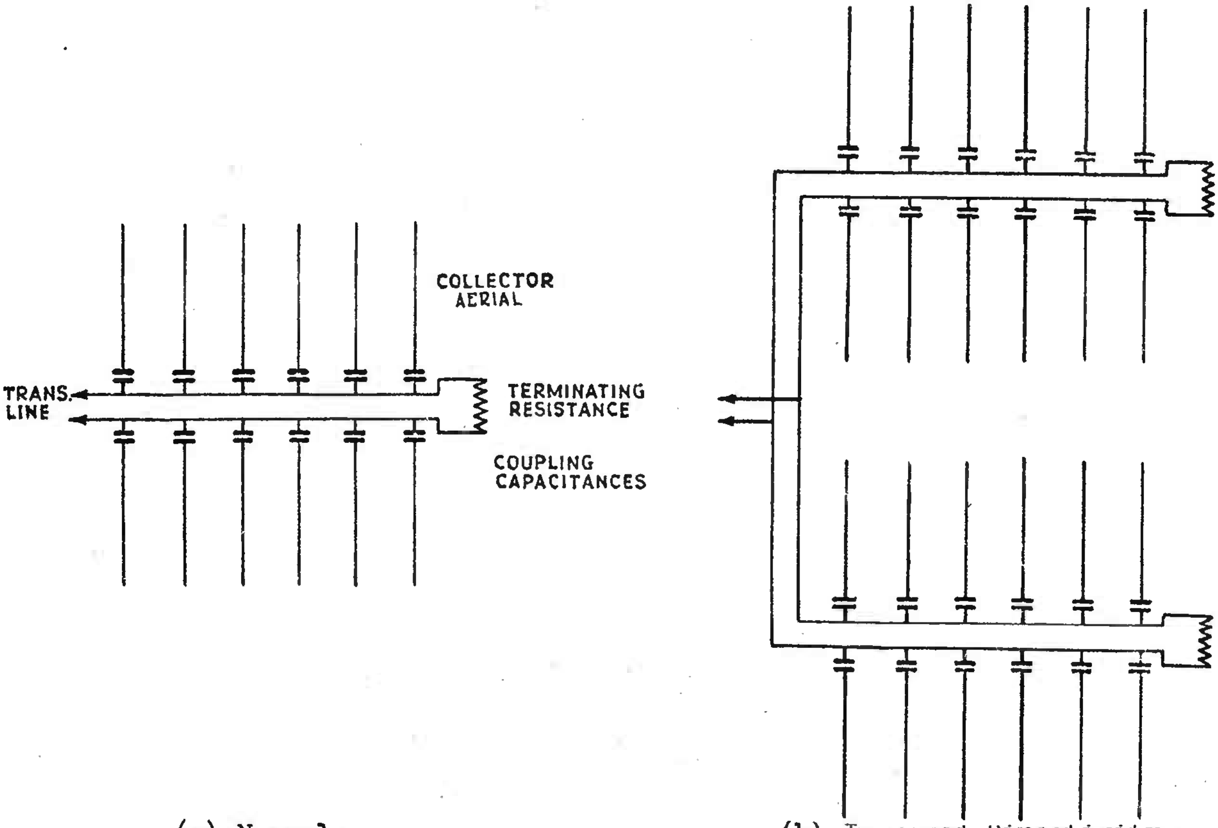

(a) Normal. (b) Improved Directivity.

FIG. 15. FISH-BONE AERIAL.

The aerial consists of a series of collectors arranged in colinear pairs loosely coupled to the transmission line by small capacities supplied by an insulator, as in Fig. 15. The collectors are usually, though not necessarily, horizontal, and the phasing is obtained by the transmission characteristic of an unloaded transmission line, which, when terminated in its characteristic impedance introduces phase shift proportional to length. This phase shift is 360° per wavelength.

/Arrays

Arrays are commonly 3 to 5 wavelengths long, the length being limited by the reactive loading that the coupled aerials place upon the transmission line.

The terminating resistance used in a fish-bone aerial should approximate the characteristic impedance. By varying the magnitude and/or phase of the terminating impedance, it is possible to arrange for a null in almost any backward direction that may be arbitrarily chosen. The directivity in horizontal plane may be materially improved by placing two fish-bone aerials broadside, as in Fig. 15b, giving a power gain of approximately two.

9. PARASITIC AERIALS.

9.1 If a section of wire approximating a half-wave in length is brought near a half-wave transmitting aerial, it will intercept some of the energy radiated by the aerial and will re-radiate it. The re-radiated energy will combine with that directly radiated by the aerial in such a way as to modify considerably the directional pattern of the aerial alone, depending upon the relative positions of the two wires, the magnitude of the currents flowing in them, and the relative phases of the currents. The "free" wire is said to be parasitically excited, and is called a parasitic element.

The reflector referred to in the previous paragraph on arrays is one form of parasitic aerial, another is when an element is placed in front of the array and is termed a "director."

The simplest possible parasitic aerial arrangement consists of a single aerial with a single parasitic element. A wide variety of directional patterns can be obtained, since two variables are involved, namely, the spacing between aerials and the tuning of the parasitic aerials.

Typical arrangements are shown in Fig. 16, consisting of a radiating aerial, a reflector and one or more directors with spacings as indicated. Fig. 16c is often termed a Yagi array.

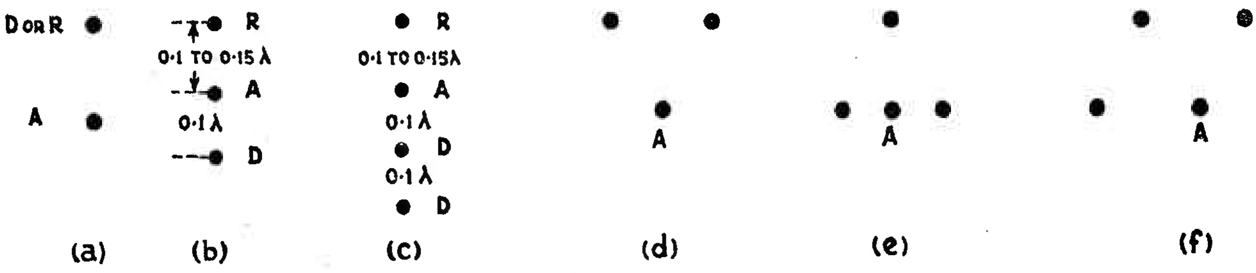

FIG. 16. TYPICAL ARRANGEMENTS OF DIRECTORS.

Fig. 17 shows the field distribution in the horizontal plane from an array of vertical aerials arranged as shown.

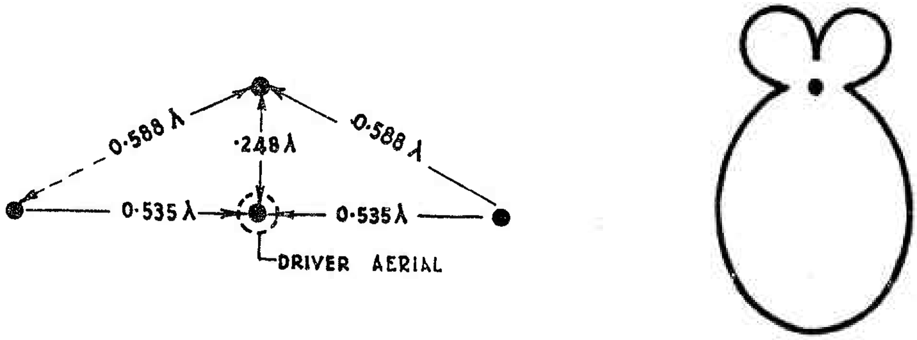

FIG. 17. FIELD DISTRIBUTION IN HORIZONTAL PLANE.

The performance of reflectors and directors is improved by tuning these elements. It is usually necessary to make the impedance of a reflector appear inductive, and this is readily accomplished by cutting it to a length slightly longer than λ/2. On the other hand, the performance of a director is improved by cutting it slightly shorter than λ/2. A sketch of a typical aerial array using one reflector and two directors is given in Fig. 18.

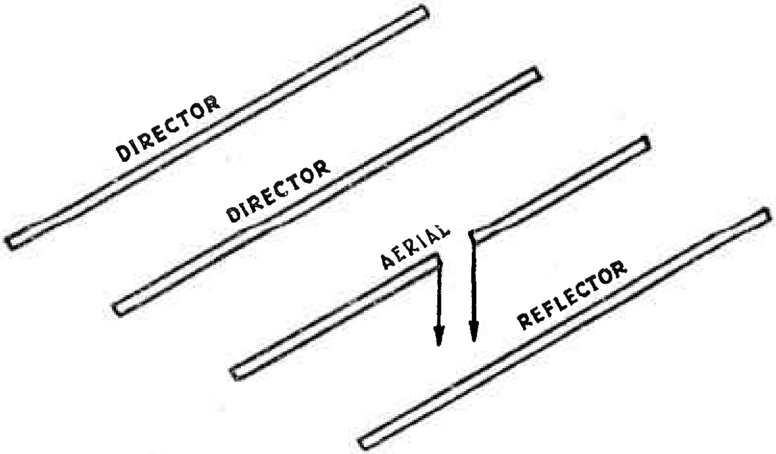

FIG. 18. 4-ELEMENT ARRAY (YAGI TYPE).

A disadvantage of the periodic or resonant type of aerial is that where transmission is desired in a number of directions and in a number of frequency bands, a separate array is required for each direction and frequency. This involves fairly complex interlocking aerial switching systems, but has the advantage that each aerial may be designed for maximum gain and directivity.

Fig. 19a shows the aerial layout of Radio Australia at Shepparton, and Fig. 19b a typical array at the same location.

Fig. 20 is a layout of the building of Radio Australia.

/Fig. 19a.

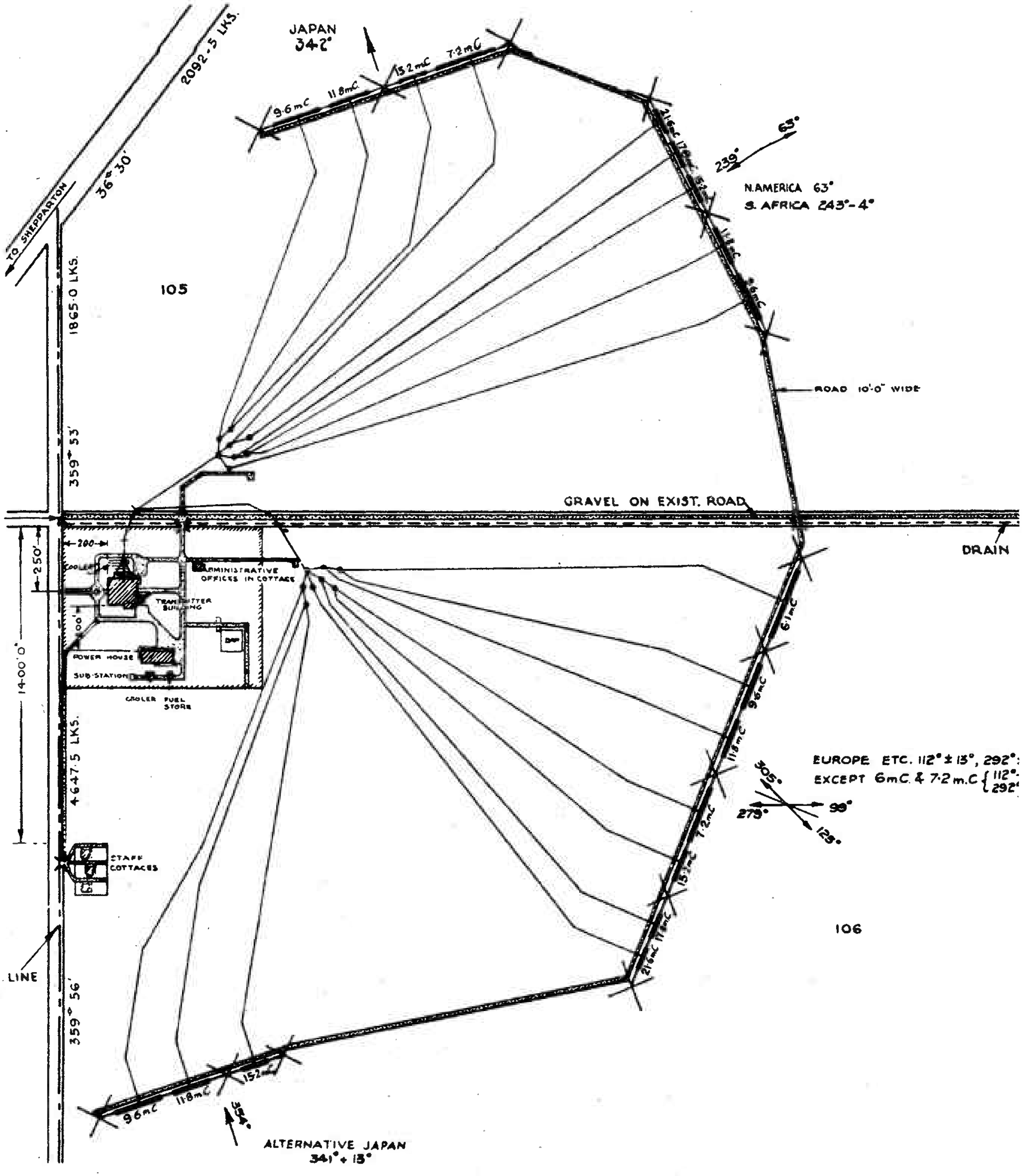

FIG. 19a. AERIAL LAYOUT, "RADIO AUSTRALIA."

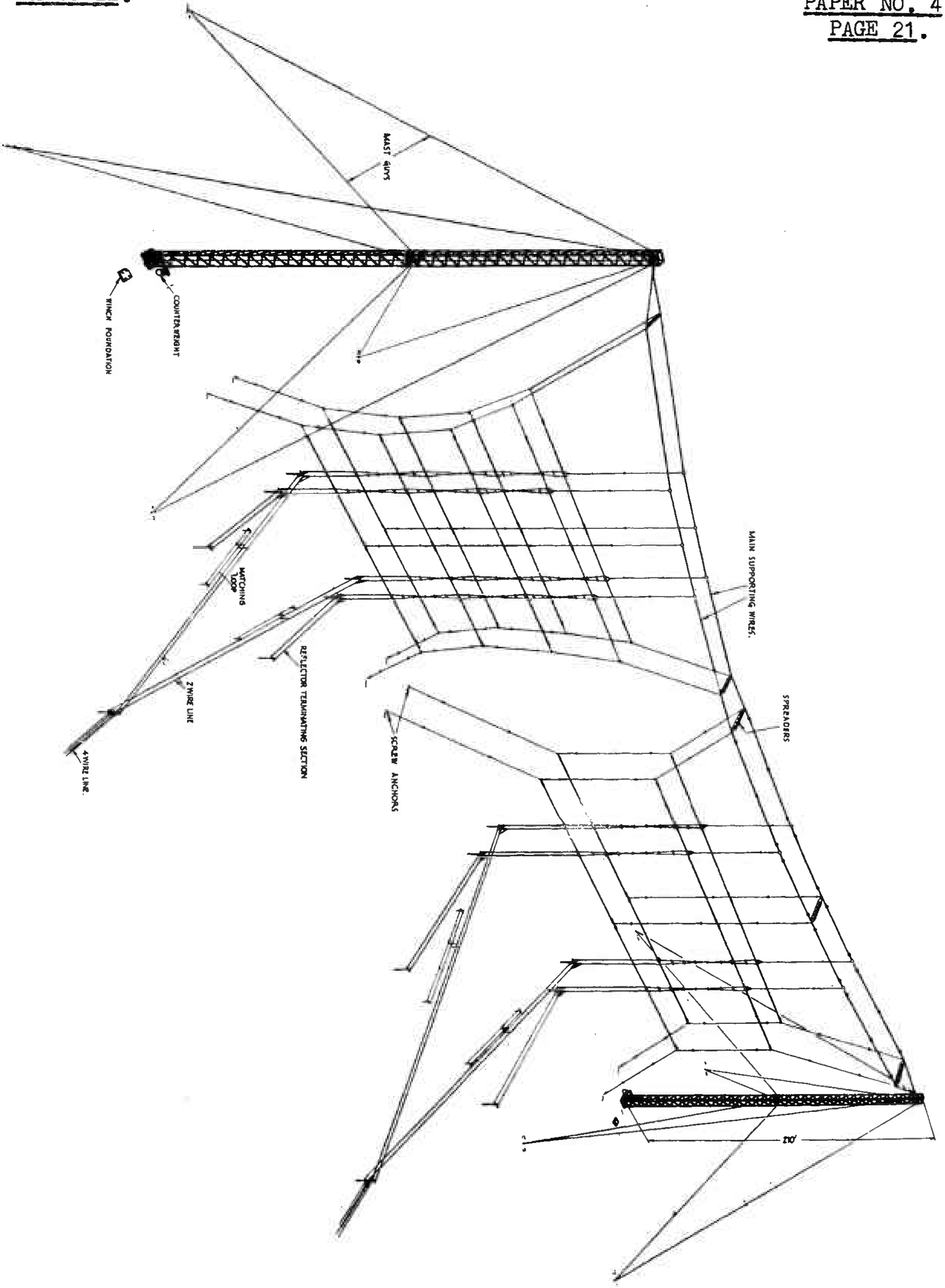

FIG. 19b. H.F. ARRAYS. "RADIO AUSTRALIA."

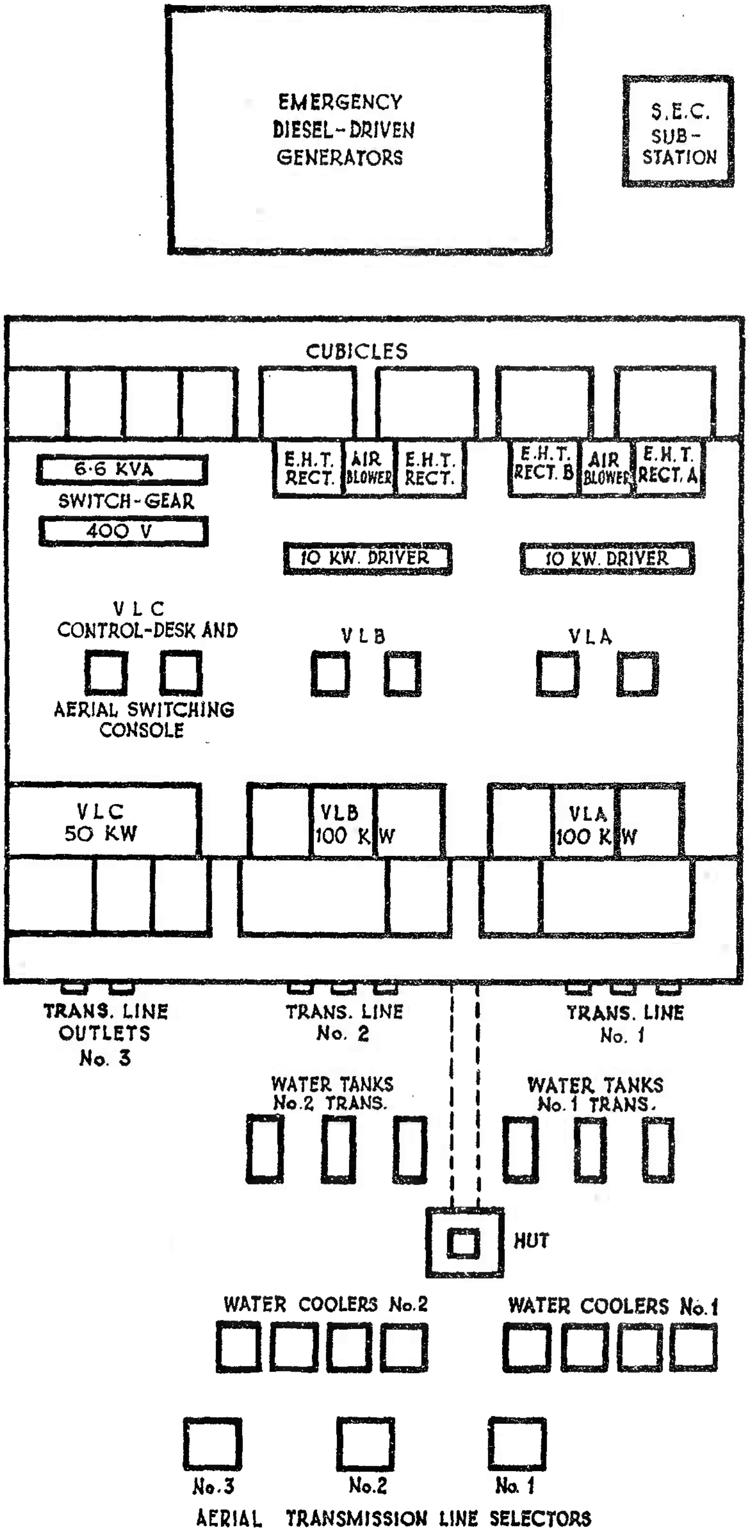

FIG. 20. RADIO AUSTRALIA.

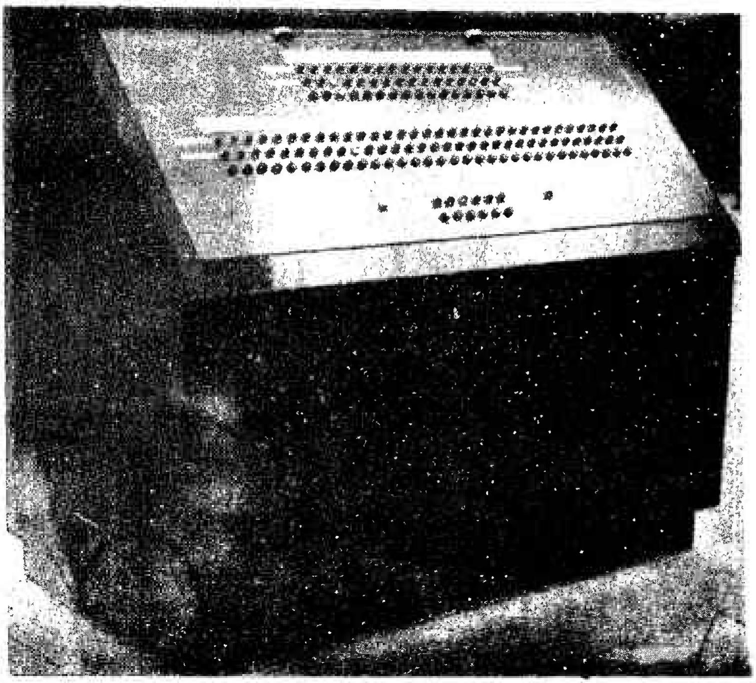

Aerial Switching Control Unit, 100 kW.
(A.W.A. S.T.C.)

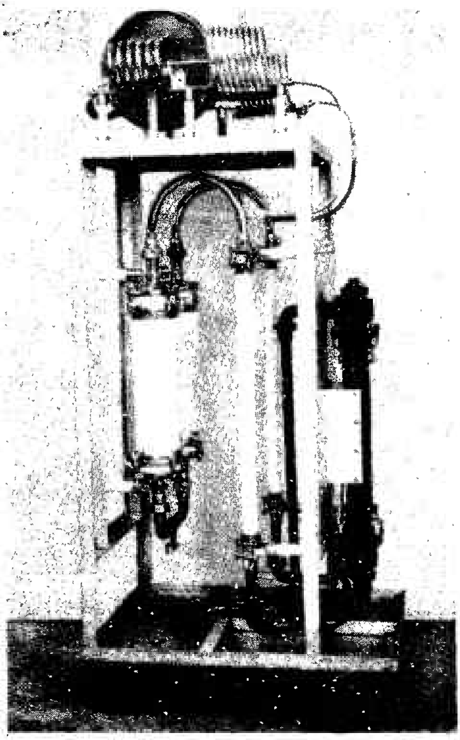

Artificial Aerial
"Radio Australia"

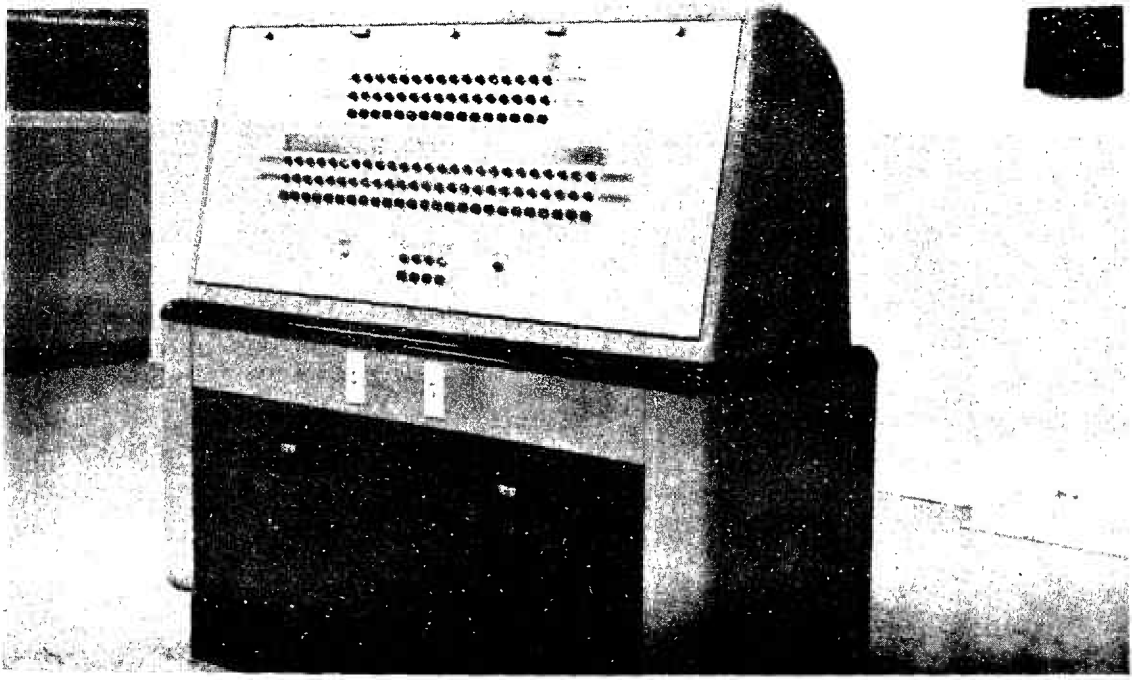

Switching Control Unit, 50 kW. (A.W.A. S.T.C.).

"RADIO AUSTRALIA." AERIAL SWITCHING CONTROL UNITS AND ARTIFICIAL AERIAL.

The general switching scheme is developed from the same basic principles as the Studio Switching Scheme (Paper No. 7, Radio (I), but whereas the latter circuits have to deal with very small amounts of audio power, a transmitter/aerial switching system has to handle hundreds of kW of radio frequency power.

These factors call for rugged design, careful layout and full interlocking protection.

10. APERIODIC OR NON-RESONANT AERIALS.

10.1 So far we have discussed resonant aerials, that is, those whose dimensions are a function of the wavelength being transmitted. There are other types which have proved useful and which are fundamentally related to the radiation from a long wire properly terminated at the end remote from the transmitter. The current in such a wire dies away exponentially with distance from the sending end, and the wire has a directional characteristic depending on the length of the wire in wavelengths of transmitted signal. This type is illustrated in Fig. 21, which indicates the manner in which the major lobe tends to lie along the wire as the length in wavelengths increases. The point of interest is that the radiation is essentially unidirectional when wire is properly terminated non-resonant.

We can combine two such wires to form a "V" aerial system and, by suitably tilting (inclining to one another) the wires, the radiation from the two legs will add in the direction of the bisector of the apex in the case of Fig. 22a and along the line jointing the ends of wires in the case of Fig. 22b. The angle ϕ is known as the "tilt angle," and it could be shown that the optimum value of this angle varies very slowly with increase in wire-lengths over two wavelengths. As a consequence, a non-resonant V with long legs will maintain its directive pattern reasonably well over a considerable frequency range. Fig. 22c shows the relationship between the length of the side "ℓ" and the optimum tilt angle.

/Fig. 21.

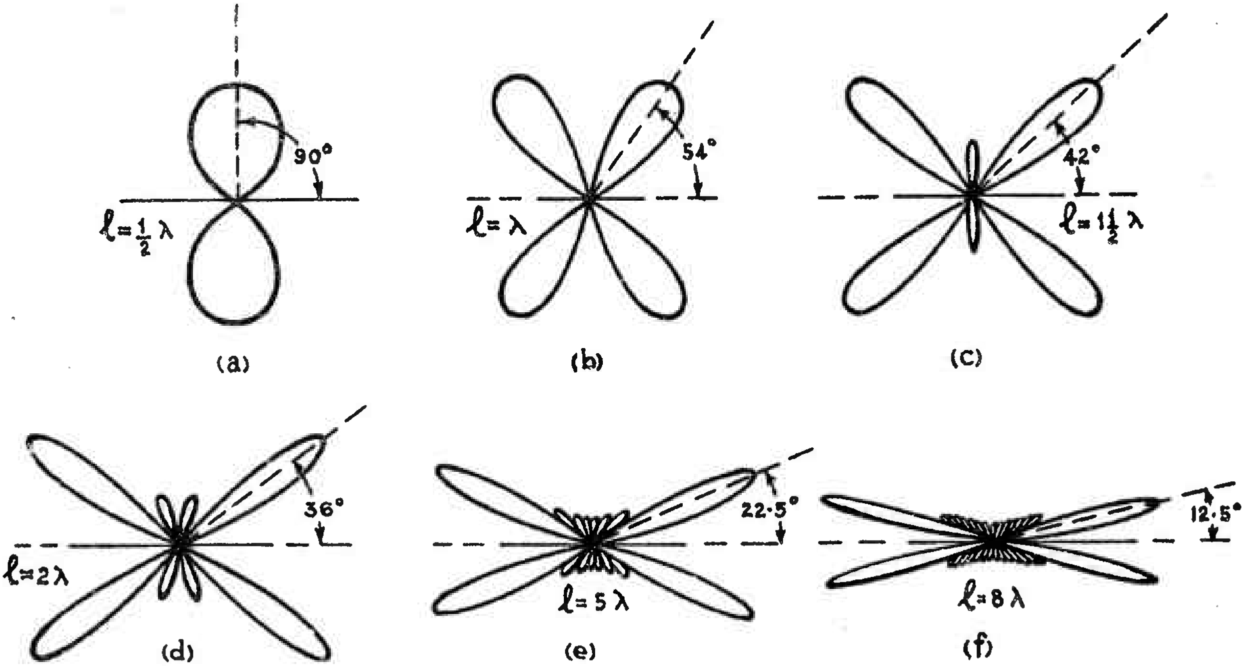

FIG. 21. HOW INCREASING LENGTH OF A SINGLE WIRE AERIAL CAUSES THE RADIATION LOBES TO APPROACH CLOSER TO THE LINE OF THE AERIAL.

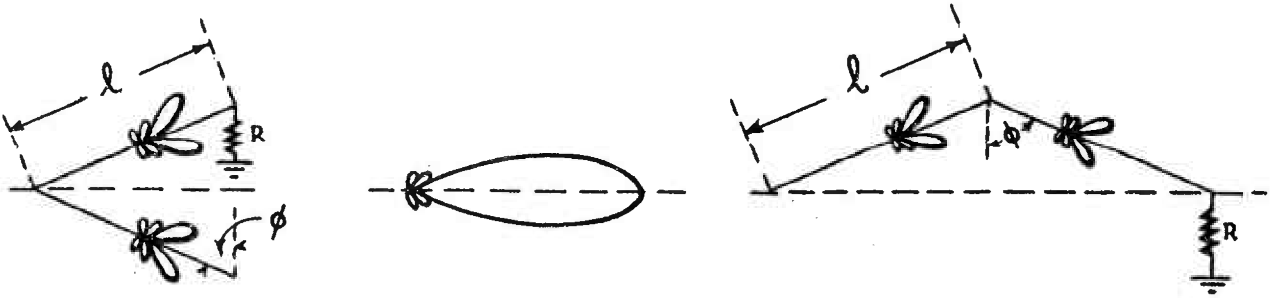

Without R the pattern is bidirectional.

(b) Same directivity as Fig. 21.

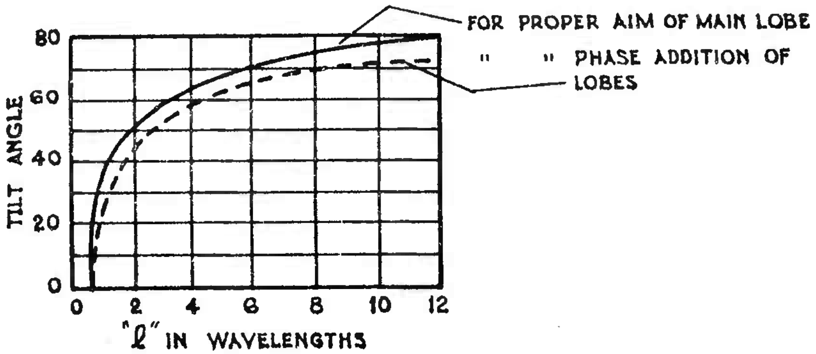

(c) Giving Optimum Tilt Angle, φ, for Various Lengths of Sides.

FIG. 22. "V" AERIALS.

11. RHOMBIC AERIALS.

11.1 A development of the long-wire "V" aerial consists of four non-resonant lines arranged in the form of a diamond or rhomboid. The normal radiation pattern is bidirectional, but may be made unidirectional, if desired, as mentioned later.

The main disadvantage of this type of aerial is that for transmitting unidirectionally, one-half of the available power is dissipated in the terminating resistance. Some of its advantages, however, are as follows -

(i) Is non-resonant and can be used over a frequency range of 2 : 1 with little loss of gain, while a 3 : 1 range may be obtained with a slight reduction at low frequencies.

(ii) Gives good directivity in both vertical and horizontal planes.

(iii) Possesses a reasonable amount of discrimination against interference occurring in a plane at right angles to its normal plane of polarisation.

(iv) Gives a higher gain than any other aerial as simply and inexpensively constructed.

(v) Is not critical as to adjustment and operation.

(vi) Does not require a ground connection that will be independent of frequency and have the same resistance in all weather.

This aerial is mostly constructed horizontally since it is difficult to erect a vertical rhombic at frequencies below about 50 Mc/s.

Characteristic Impedance. In order to obtain the desired unidirectional radiation characteristic, it is necessary to terminate the rhombic in its characteristic impedance. For receiving aerials, this termination may be a simple non-inductive resistance, but, in the case of transmitters, since the resistance is required to absorb from a quarter to half the total power of the transmitter, it is necessary to provide something more elaborate. A convenient method is to use a 2-wire transmission line having a characteristic impedance equal to the terminating resistance required and employing iron wire to give high loss. This line can be run back from the terminating apex, and, after being sufficiently long to dissipate most of the power, can be terminated in a low wattage

/Mont

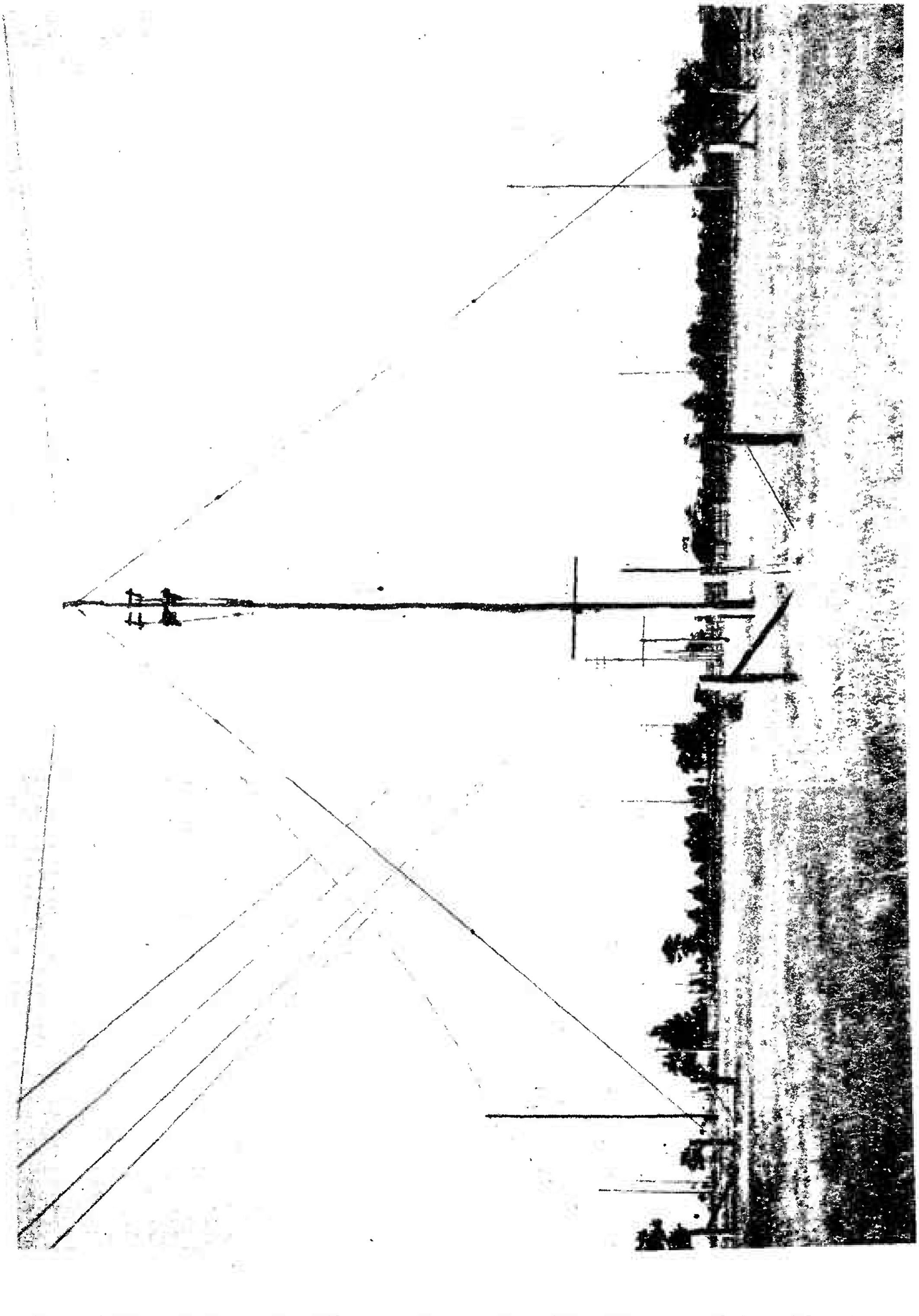

MONT PARK AERIAL SYSTEM. ONE OF THE EUROPEAN RHOMBIC AERIALS.

resistor. The characteristic impedance varies from about 860 to 550 ohms over the range 6 to 22 Mc/s, but can be considerably improved by using three wires bunched at the apexes and spaced at the side poles. The impedance in this case varies from about 650 to 570 ohms over the same range.

Design Characteristics.

The designer has three variables at his disposal -

(i) the tilt angle "ϕ".
(ii) the length of the side "ℓ".
(iii) the height of the wire above ground "H".

It is possible to control the angle above the horizontal for maximum response by varying the tilt angle while leaving the length of the legs constant. Similarly, the effect of insufficient height on the directional characteristics can be compensated by suitably increasing the leg length and modifying the tilt angle. The power gain of a rhombic aerial depends upon the length of the legs in wavelengths as well as the other proportions of the aerial, thus the gain increases as the frequency increases.

Increasing frequency also affects the radiation angle, Δ, which, in typical cases, may vary from 26° at 7 Mc/s to 8° at 20 Mc/s.

The relation of these three factors to give maximum output at a predetermined wavelength, λ and radiation angle, Δ, is -

$$\begin{aligned} \text{Cos } \Delta &= \text{Sin } \phi \\ \text{H (metres)} &= \lambda/4 \text{ Sin } \Delta \\ \ell \text{ (metres)} &= \frac{\lambda}{2 \text{ Sin}^2 \Delta} \end{aligned}$$

/Aerial

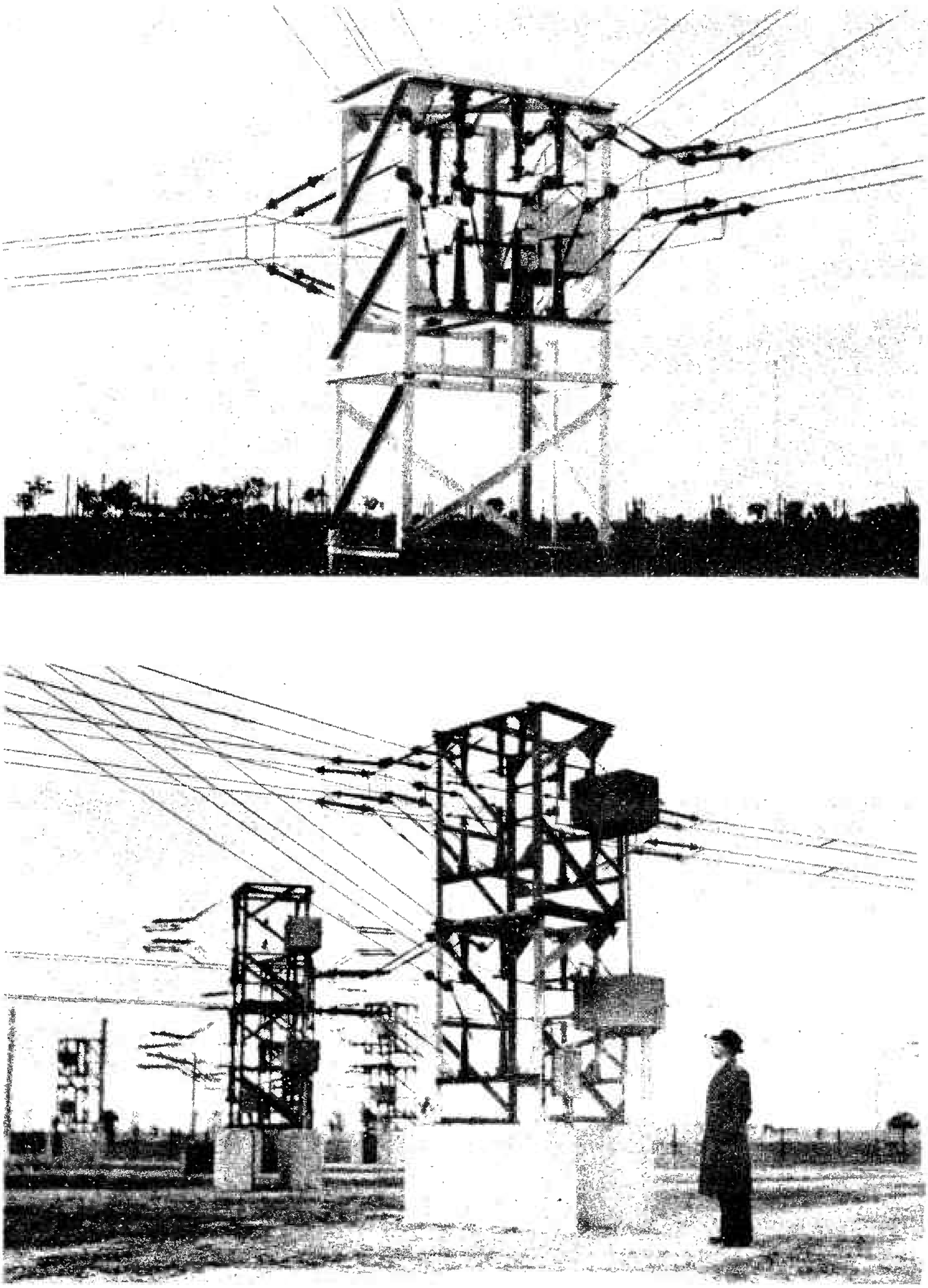

AERIAL AND TRANSMISSION-LINE SWITCHING UNITS. (MOTOR CONTROL).
"RADIO AUSTRALIA."

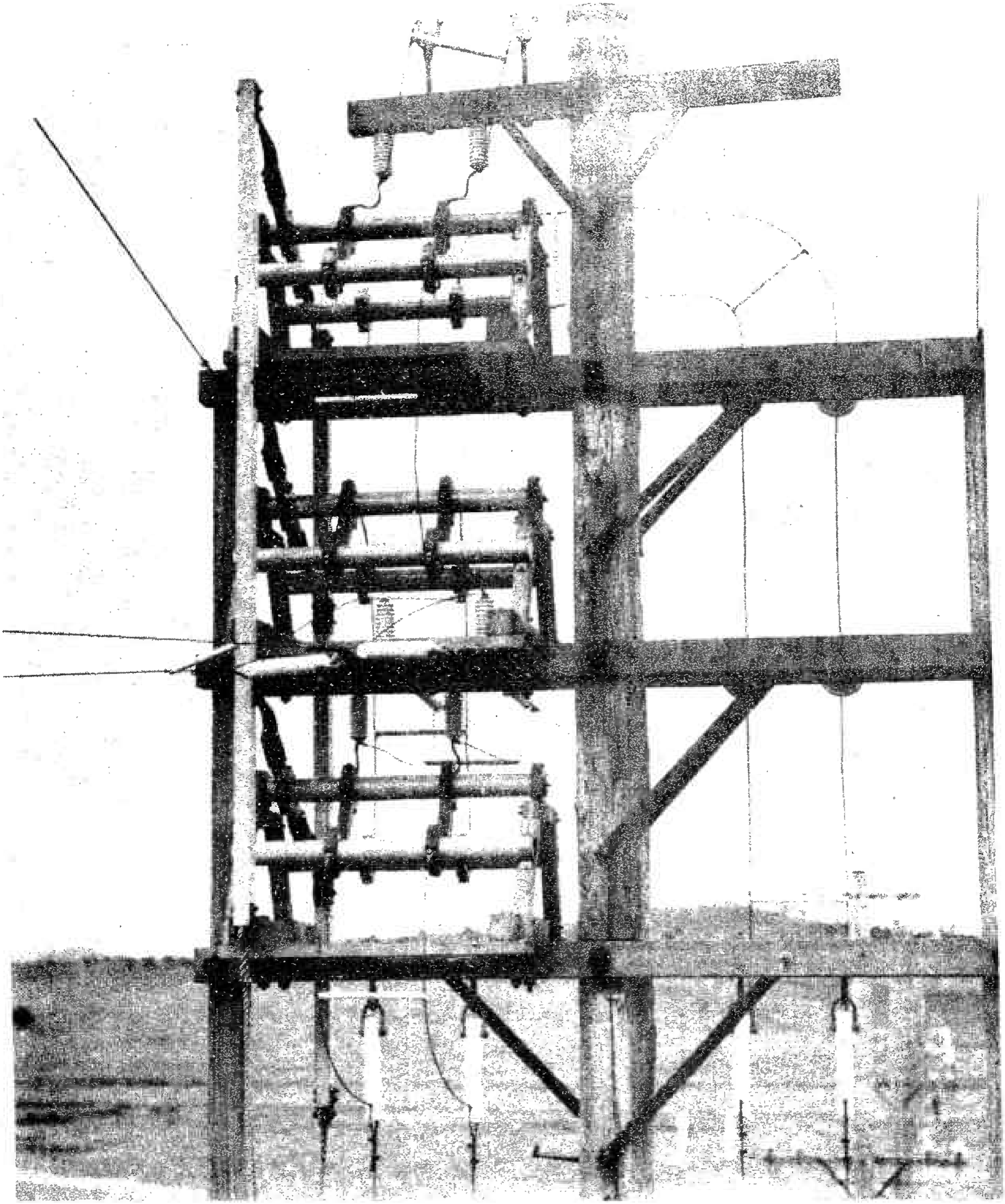

20 kW H.F. TRANSMITTER. RHOMBIC AERIAL SWITCHING UNIT (S.T.C.).

Fig. 23 shows a typical terminated rhombic, and Fig. 24 typical vertical and horizontal radiation patterns at different frequencies.

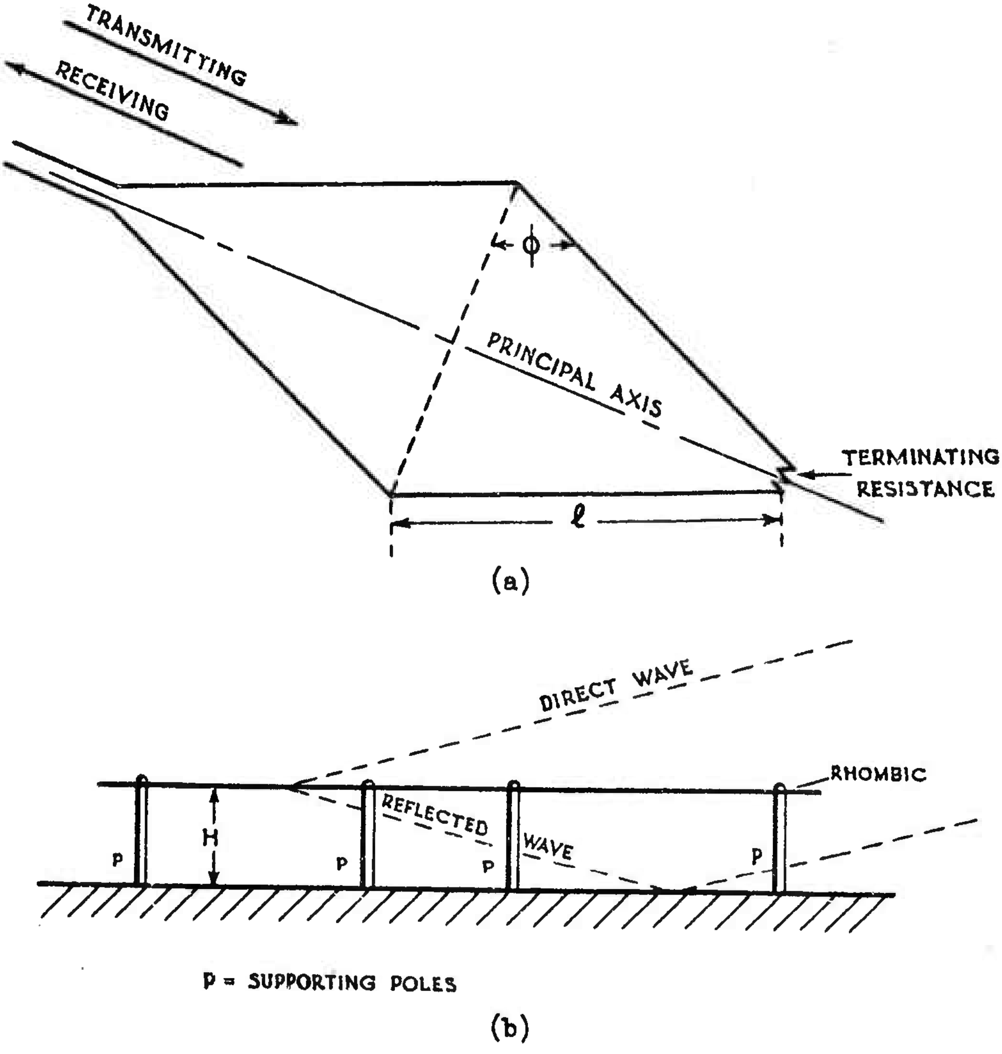

PLAN AND ELEVATION OF A TYPICAL RHOMBIC AERIAL.
THE PATHS OF A REFLECTED AND DIRECT WAVE ARE SHOWN IN FIG. 23b.
FIG. 23.

Fig. 25 shows the three design factors mentioned above plotted for easy reference.

A recent development of this aerial in connection with a high-power (200 kW) short-wave transmitter is known as the "re-entrant" rhombic, the name being derived from the fact that, in place of the wasteful terminating resistance, the energy is fed back in correct phase to the input of the rhombic and thus augments the radiated power. A gain of the order of 2 db is obtained with this design (see Fig. 26).

/Fig. 24.

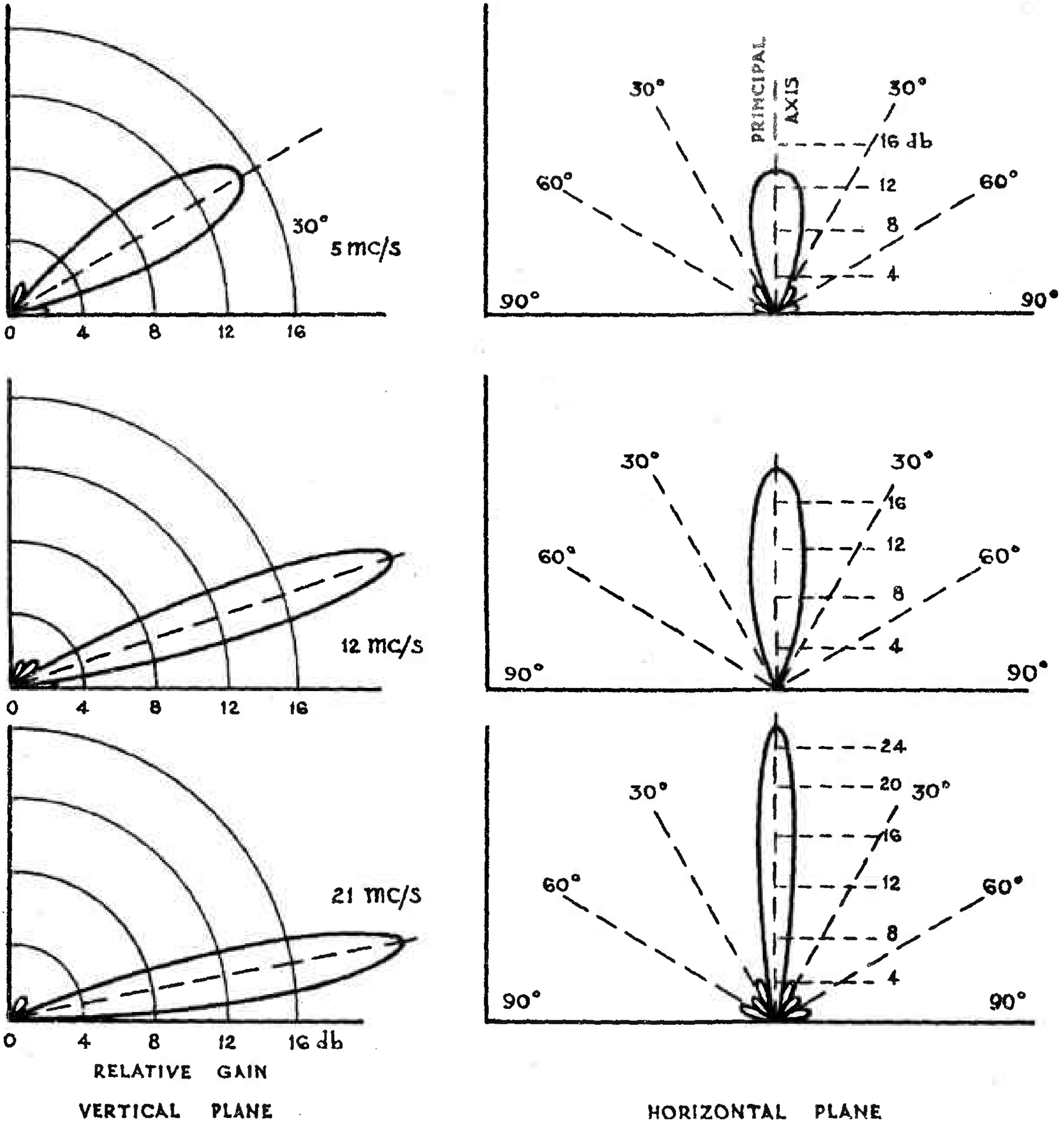

TYPICAL DIRECTIVITY PATTERNS OF A RHOMBIC AERIAL.

FIG. 24.

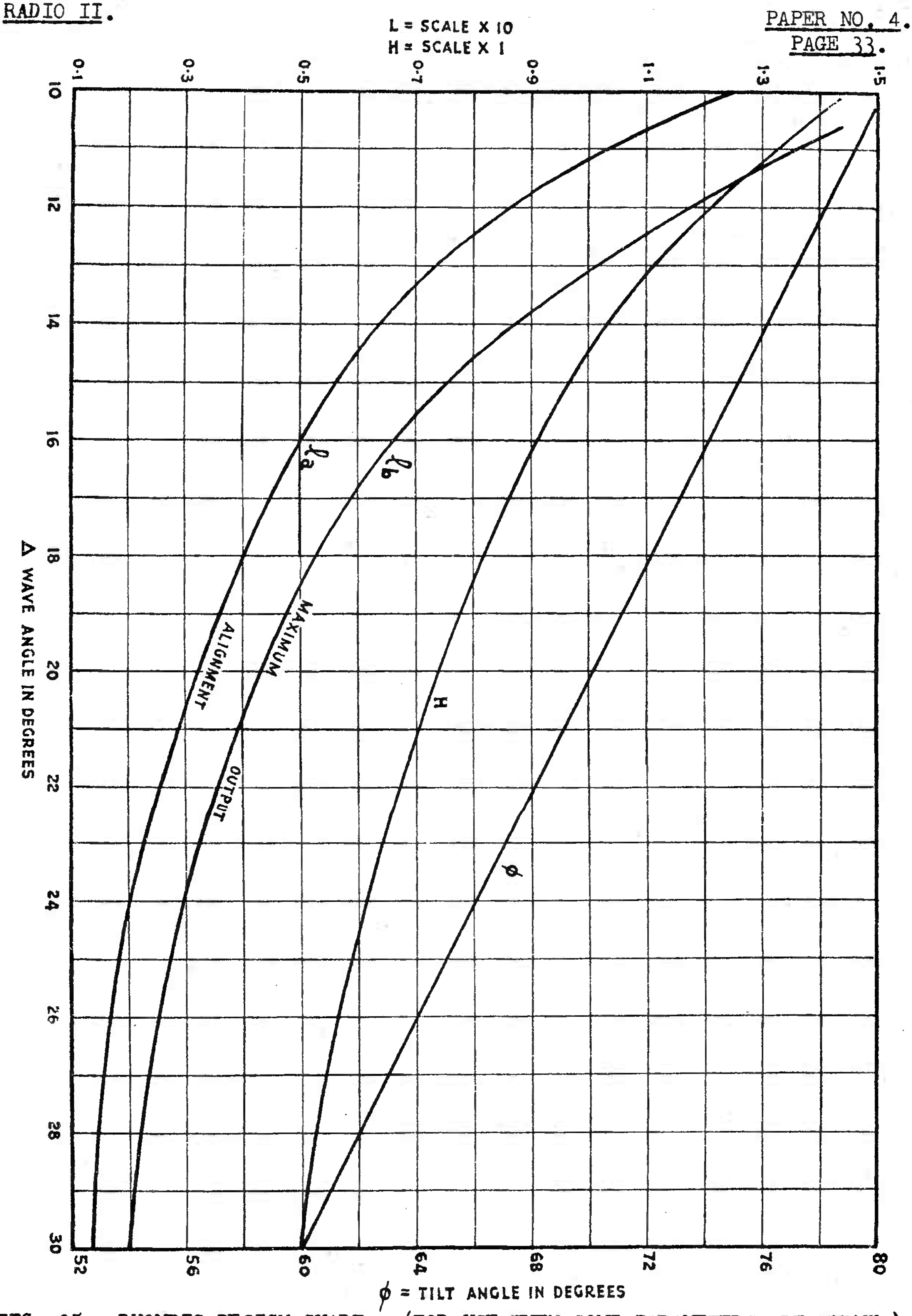

FIG. 25. RHOMBIC DESIGN CHART. (FOR USE WHEN SOME PARAMETERS ARE KNOWN.)

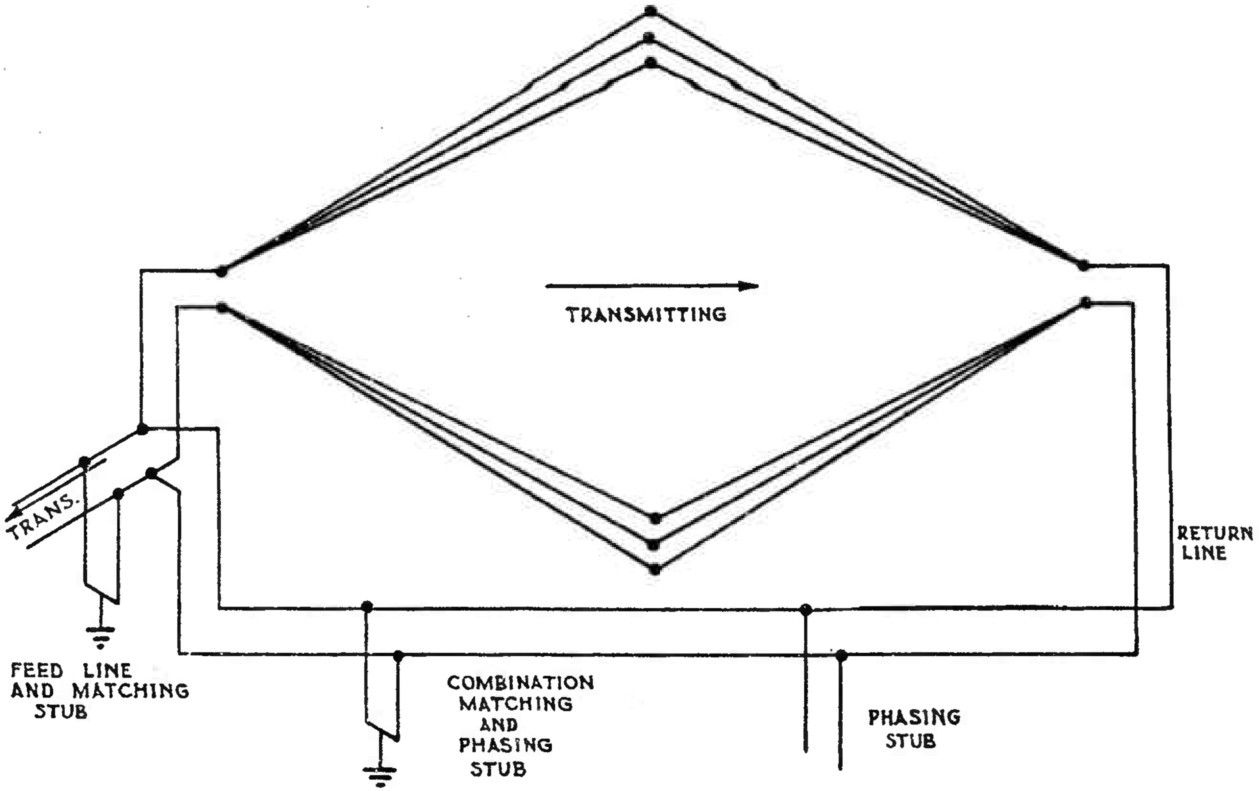

RE-ENTRANT RHOMBIC.

FIG. 26.

12. RECEIVING AERIALS.

12.1 Most aerials designed for transmitting are also suitable for receiving, but there is no particular advantage in building elaborate arrays for this purpose. Extreme directivity is a disadvantage because of the random angles of arrival of radio waves at the receiving location. The rhombic aerial makes a good relatively wide-band receiving aerial, as do the "V" types.

The ordinary broadcast receiver has enough sensitivity so that an aerial with an effective height of only a few metres is adequate to provide a signal that will override the ordinary set noise.

/Aerial

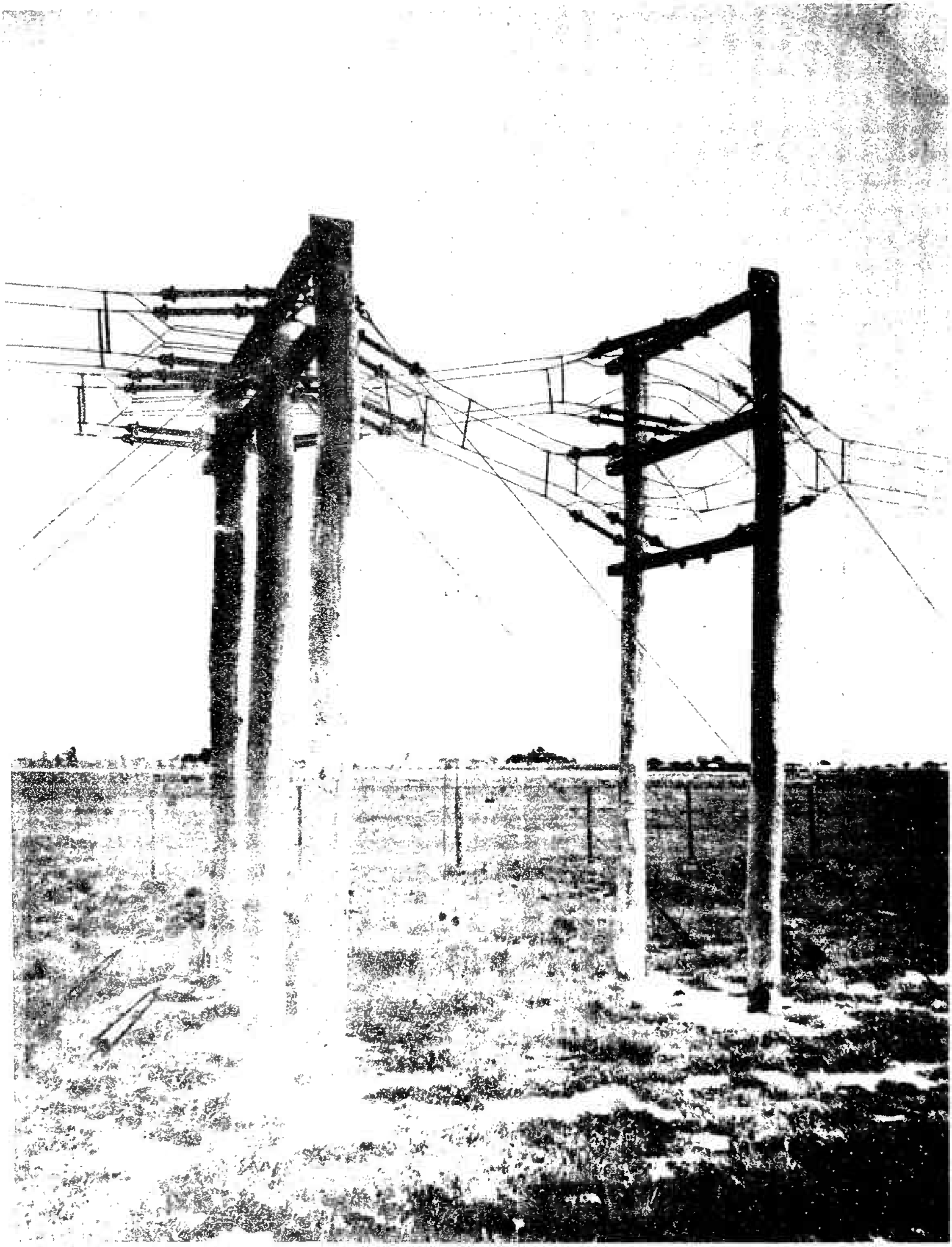

"RADIO AUSTRALIA" AERIAL ARRAYS.
SLEWING JUNCTION.

Details of some types of receiving aerials, together with coupling circuits, are given in Paper No. 5. A few others will be mentioned here.

All-Wave and Noise-Reducing Aerial System. All-wave broadcast receivers operate most effectively when used in conjunction with special aerial systems designed to give adequate pick-up over a wide frequency range with a minimum of directivity, but which, at the same time, minimise noise pick-up. An example of a wide-band aerial system is shown in Fig. 27. This employs a horizontal doublet aerial having an over-all length slightly less than a half wavelength at the highest frequency to be received. Each half of the aerial consists of two wires arranged in a V, as shown in Fig. 27. The aerial has its own ground and is coupled to a balanced non-resonant line by an aerial coupling unit.

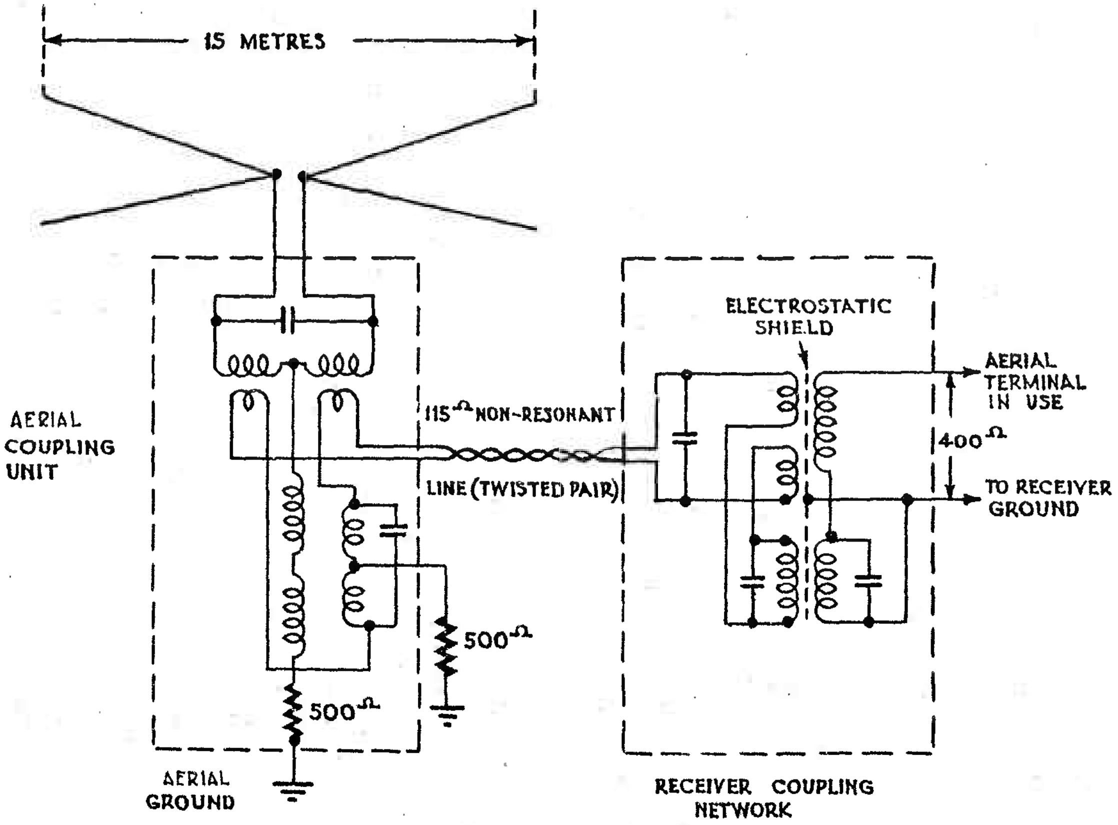

ALL-WAVE NOISE-REDUCING AERIAL SYSTEM.

FIG. 27.

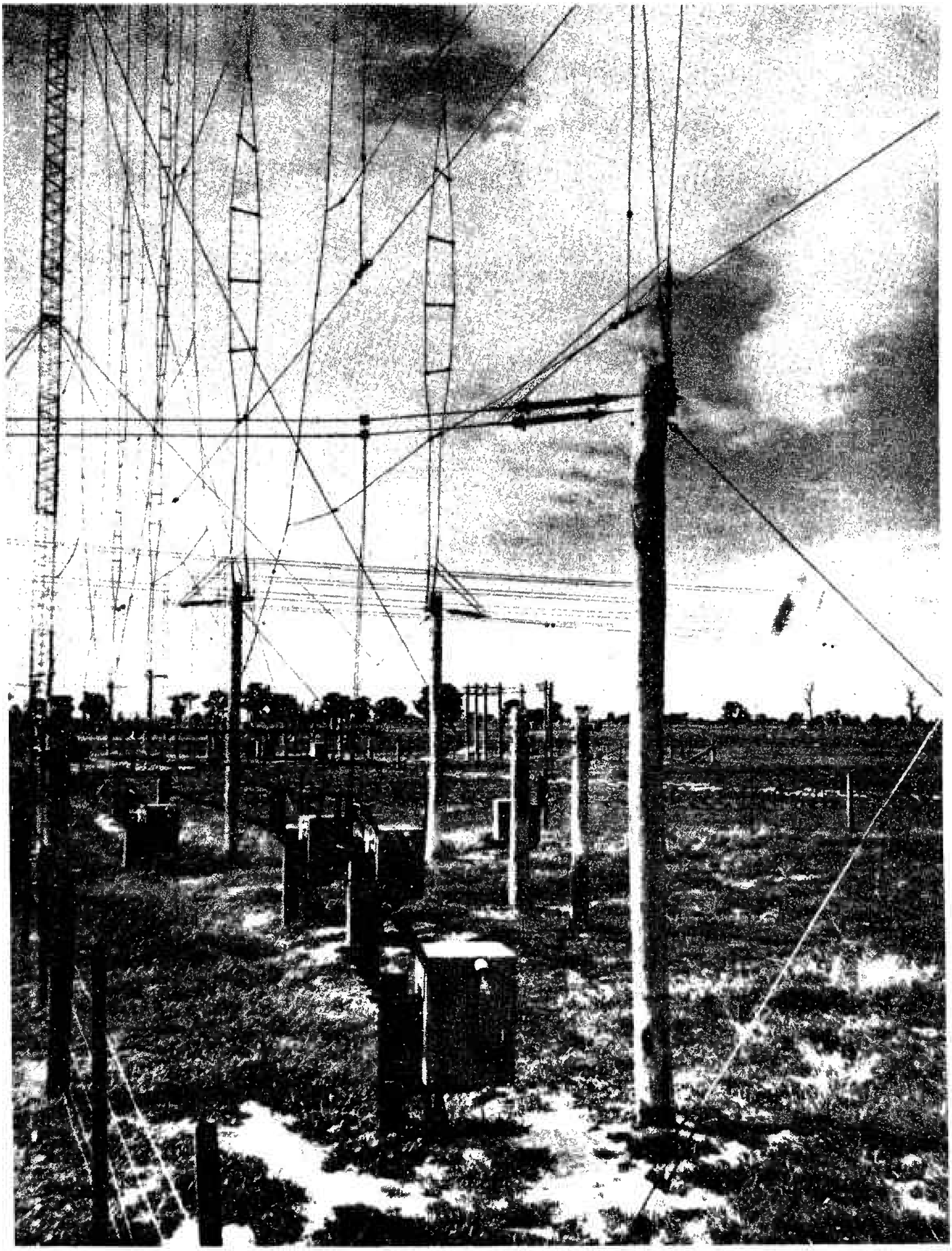

"RADIO AUSTRALIA" AERIAL REVERSING JUNCTION.

Another simple noise reducing aerial arrangement is shown in Fig. 28, making use of a balanced transmission-line input, which is mechanically and electrically symmetrical and electrostatically shielded. This arrangement affords a marked improvement in signal-to-noise ratio, particularly if advantage is taken of the fact that the transmission line permits the aerial to be placed some distance away from the receiver, where there is less noise.

The fish-bone aerial, described under transmitting aerials, is also a good receiving aerial possessing excellent directivity and frequency coverage. It also has the further advantage of having a directional pattern characterised by small minor lobes.

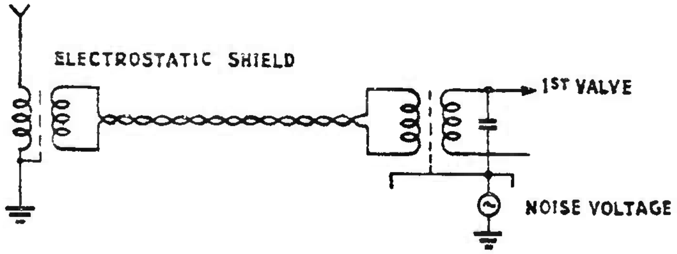

SIMPLE NOISE REDUCING AERIAL.

FIG. 28.

13. LONG WAVE AERIALS.

13.1 Aerials for the longer wavelengths (low frequencies) cannot be designed for such efficient operation as those for the relatively high frequencies, since so much of the efficiency is dependent upon dimensions in terms of wavelengths. For example, one wavelength at 30 Mc/s is 10 metres, whereas at 30 kc/s it is 10,000 metres (about 6-1/4 miles).

Fig. 29 shows a typical flat-top aerial for very long waves with some illustrative dimensions. It will be seen to cover a large area and to require very high poles.

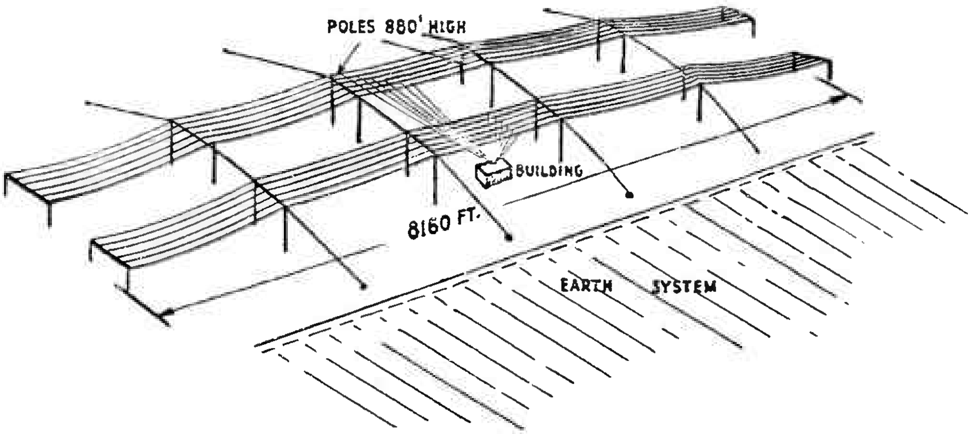

FIG. 29. FLAT-TOP LONG-WAVE AERIAL.

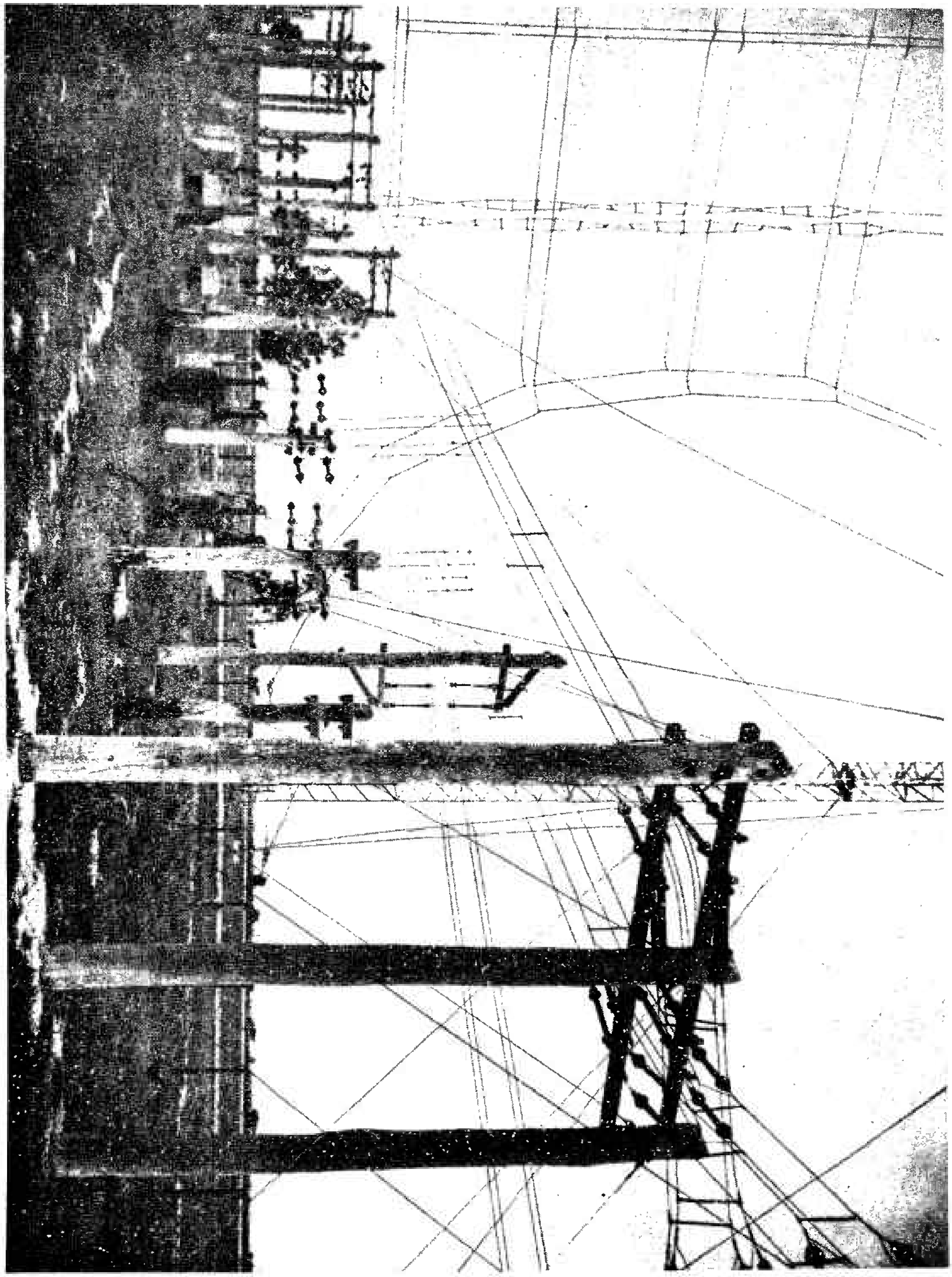

"RADIO AUSTRALIA" SLEWING JUNCTION.

Another type for reducing loss resistance, and known as the multiple-tuned aerial, is shown in Fig. 30

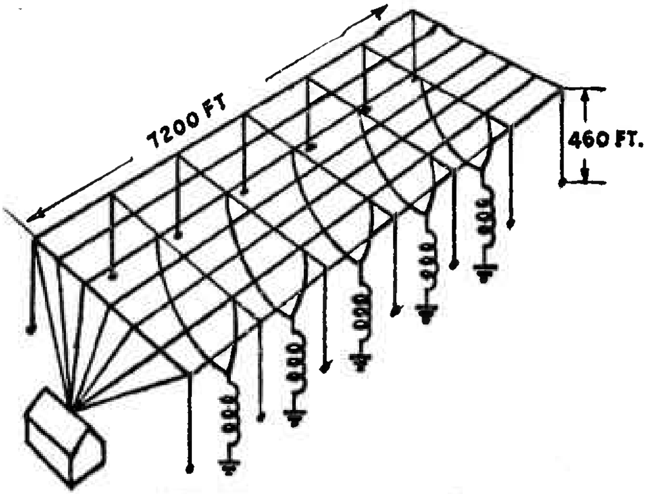

MULTIPLE-TUNED AERIAL.

FIG. 30.

14. TEST QUESTIONS.

1. State the requirements of a short-wave transmitter aerial.

2. Define -

   Aerial Array.
   Directivity.
   Wave Angle.

3. Why are reflectors used with transmitting arrays?

4. Why is it necessary for all currents in an array to be in correct phase relationship?

5. State the advantages of rhombic aerials for short-wave transmitters.

6. Compare broadside arrays with end-fire arrays.

7. What is the effect of stacking elements?

8. What is a Re-Entrant Rhombic Aerial?

END.

COMMONWEALTH OF AUSTRALIA.

Chief Engineer's Branch,
Postmaster-General's Department,
Treasury Gardens,
Melbourne, C.2.

COURSE OF TECHNICAL INSTRUCTION.

RADIO II.

PAPER NO. 5.
PAGE 1.

RADIO RECEIVING PRINCIPLES.

CONTENTS.

---

1. INTRODUCTION.

1.1 A Radio Receiver is a device for intercepting radio frequency waves (which have been radiated by a radio transmitter) and extracting messages from these waves. A large number of varieties and types of radio receivers has been developed for many different purposes, although the basic circuit principles are similar. These principles will be discussed as applied to radio receivers for general communication purposes, including broadcasting.

1.2 Receiving Circuit Principles. Receiving circuit principles will be considered under the following broad divisions in this Paper and Papers Nos. 6, 7 and 8 -

Types.
Radio frequency circuits -
  (i) Input circuits.
  (ii) Amplifiers.
Intermediate frequency amplifiers.
Frequency conversion.
Detection.
Audio frequency amplification.
Performance tests.
General principles of fault location.

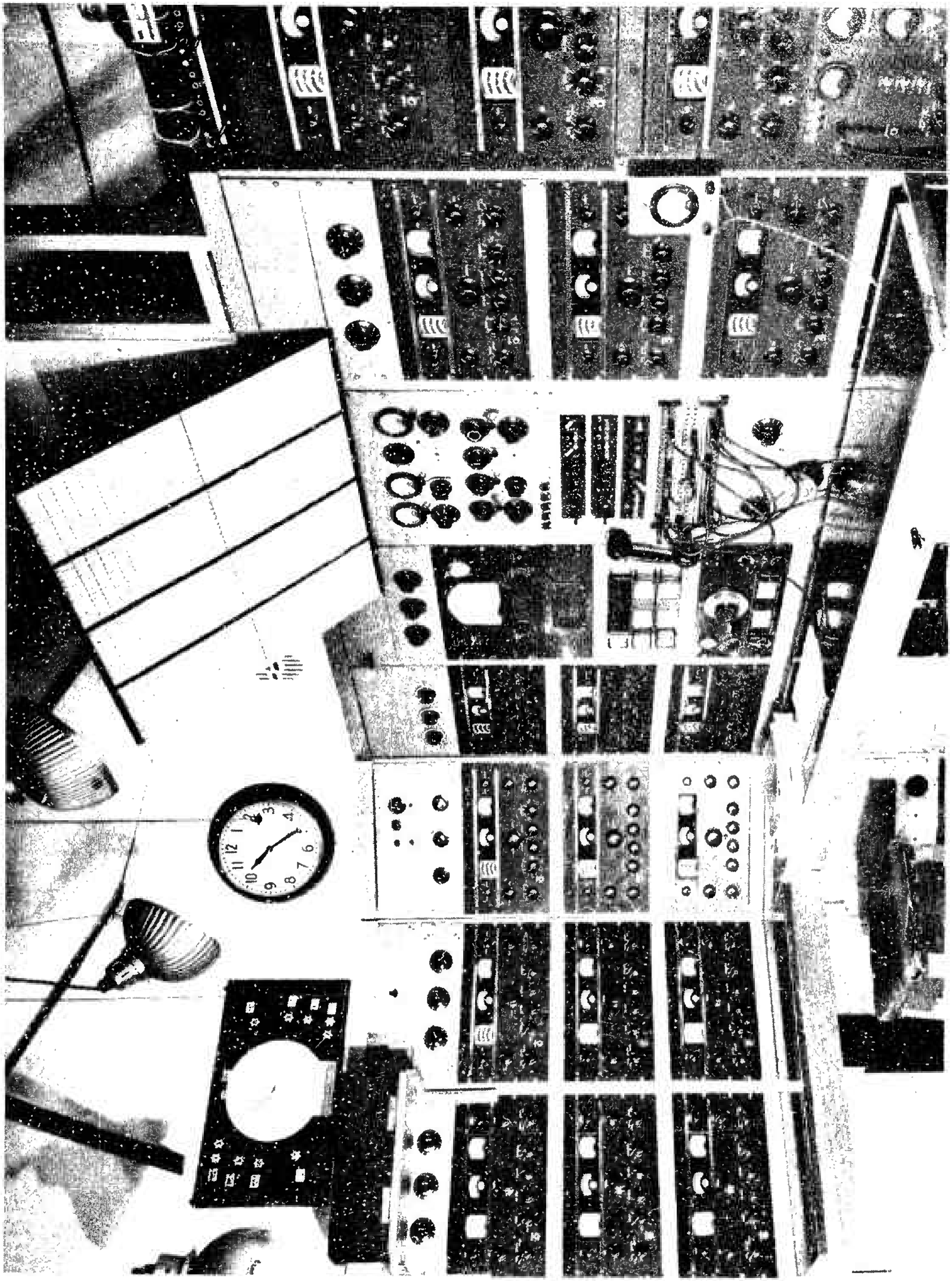

TYPICAL P.M.G. H.F. RECEIVING STATION.

1.3 Functions. The functions of a Radio Receiver are -

(i) To select a particular signal from a number of signals picked up by the aerial, and reject others.

(ii) To amplify the selected radio signal.

(iii) To demodulate or detect the signal to obtain the audio frequency currents.

(iv) To amplify the audio frequency signals.

(v) To reproduce the amplified signal on a loud-speaker or head-phones.

2. TYPES.

2.1 The basic type of receiver is that consisting of a tuned circuit connected to an aerial, and a detector such as a crystal or a thermionic valve operating head receivers. Selectivity and output of this simple set are low, though the output may be increased to operate a loud-speaker by adding an audio frequency amplifier. Selectivity can be increased by additional tuned circuits between the aerial and the detector. With certain types of valve detectors selectivity and output may be increased by applying reaction, that is, feeding radio frequency modulated carrier energy back from the anode to the grid circuit.

For adequate selectivity and low detector distortion, radio frequency amplification is essential. The selective property of a tuned circuit cannot be fully utilised if it is coupled to another tuned circuit, for each tends to damp the other.

By separating tuned circuits with valves, maximum selectivity is achieved and the signal is also amplified. Most detectors are only linear over a limited range and above a given value of input signal, and radio frequency amplification is necessary to raise the modulated carrier to this level.

A possible type of receiver, therefore, is one having radio frequency and audio frequency amplification. Owing to the difficulty of maintaining stability and the mechanical limitations imposed by the ganged variable condenser, two stages of radio frequency amplification are seldom exceeded for medium or long-wave receivers. The amplification of a radio frequency stage is not constant over the wave band but tends to decrease with increasing frequency, thus, selectivity tends to fall as the frequency is increased. The value of inductance is so small in high-frequency receivers that the radio frequency stages rarely contribute amplification to the signal, but mostly serve to improve selectivity and reduce interference and noise.

The difficulties of obtaining adequate carrier frequency amplification and constant selectivity over a given tuning range can largely be overcome by using the superheterodyne principle and generally converting all incoming radio frequency carriers to a constant low radio frequency, at which high amplification and good selectivity can be obtained. This type of receiver will, therefore, be treated in some detail in these notes, since it is probably the most commonly used.

Summing up the foregoing notes, radio receivers may be classified into the following general types -

Crystal receiver.
Regenerative valve receiver.
Tuned radio frequency receiver, and
Superheterodyne.

2.2 Crystal Receiver. A Crystal Receiver circuit is shown in Fig. 1. This receiver comprises a tuned circuit, a crystal possessing unilateral conductivity and headphones. Selectivity is poor and volume low, but it is simple and inexpensive.

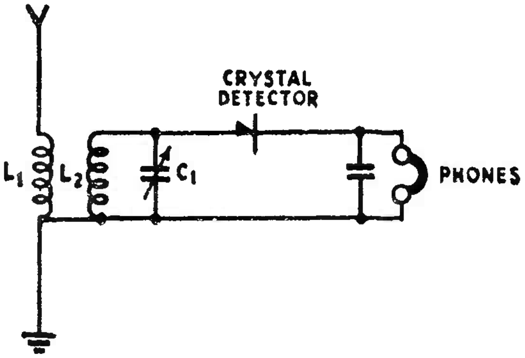

CRYSTAL DETECTOR RECEIVER.

FIG. 1.

2.3 Regenerative Receiver. Fig. 2 is a single valve Regenerative Receiver, the regeneration being provided by feedback from coil L_3 to L_2 and controlled by variable condenser C_2. (Alternatively, L_3 could have variable coupling to L_2.) The addition of the audio frequency amplifier shown by dotted lines enables a loud-speaker to be used. This is a popular type of receiver since it is economical, reasonably selective and has fair volume.

/Fig. 2.

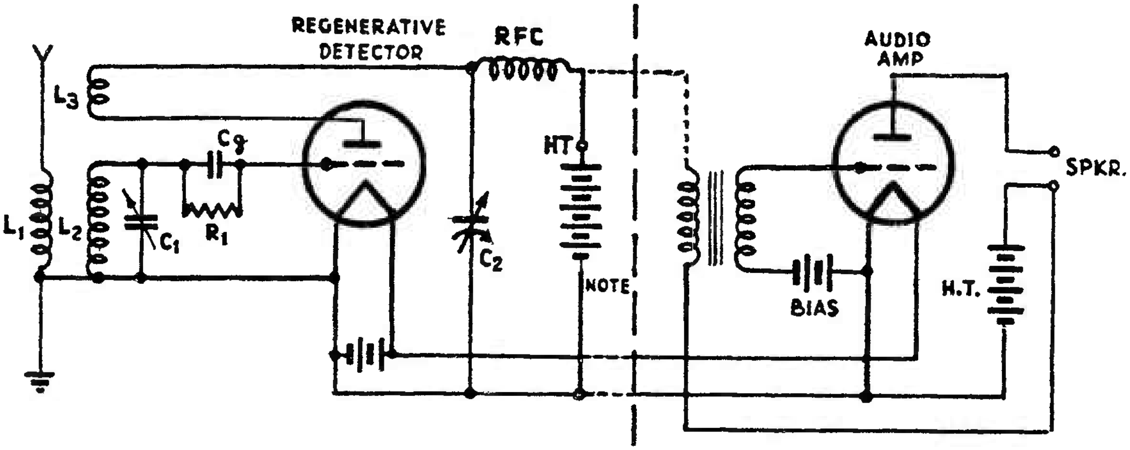

FIG. 2. SIMPLE REGENERATIVE RECEIVER.

Note. Battery omitted when audio amplifier added.

2.4 Tuned Radio Frequency Receiver. Fig. 3 shows a Tuned Radio Frequency (T.R.F.) Receiver. Valves V_1, V_2 and V_3 function as signal frequency amplifiers, V_4 is the anode bend detector and V_5 the audio frequency amplifier. The tuning condensers C_1 to C_4 are usually ganged, and may be fitted with small "trimming" condensers to assist in ganging. This type of receiver, with three radio frequency amplifying stages, requires careful design, shielding and screening, and is capable of excellent performance. Additional refinements could be the provision of a diode detector, automatic gain control and a push-pull audio output stage with negative feedback.

A later type of T.R.F. receiver, having the abovementioned improvements, is shown in Fig. 4, the power supply being omitted. When shorn of decoupling condensers, decoupling resistors and voltage-dropping resistors, the circuit is similar to Fig. 3.

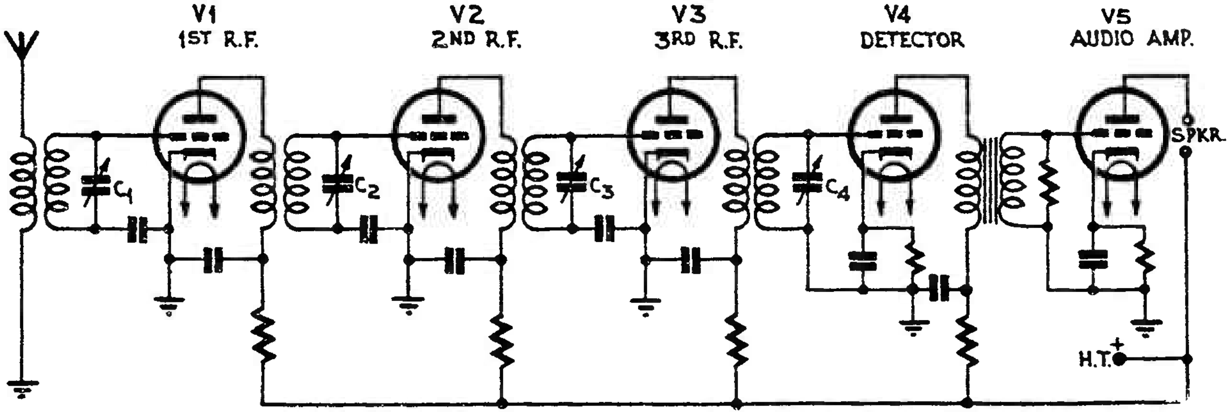

FIG. 3. SIMPLE T.R.F. RECEIVER.

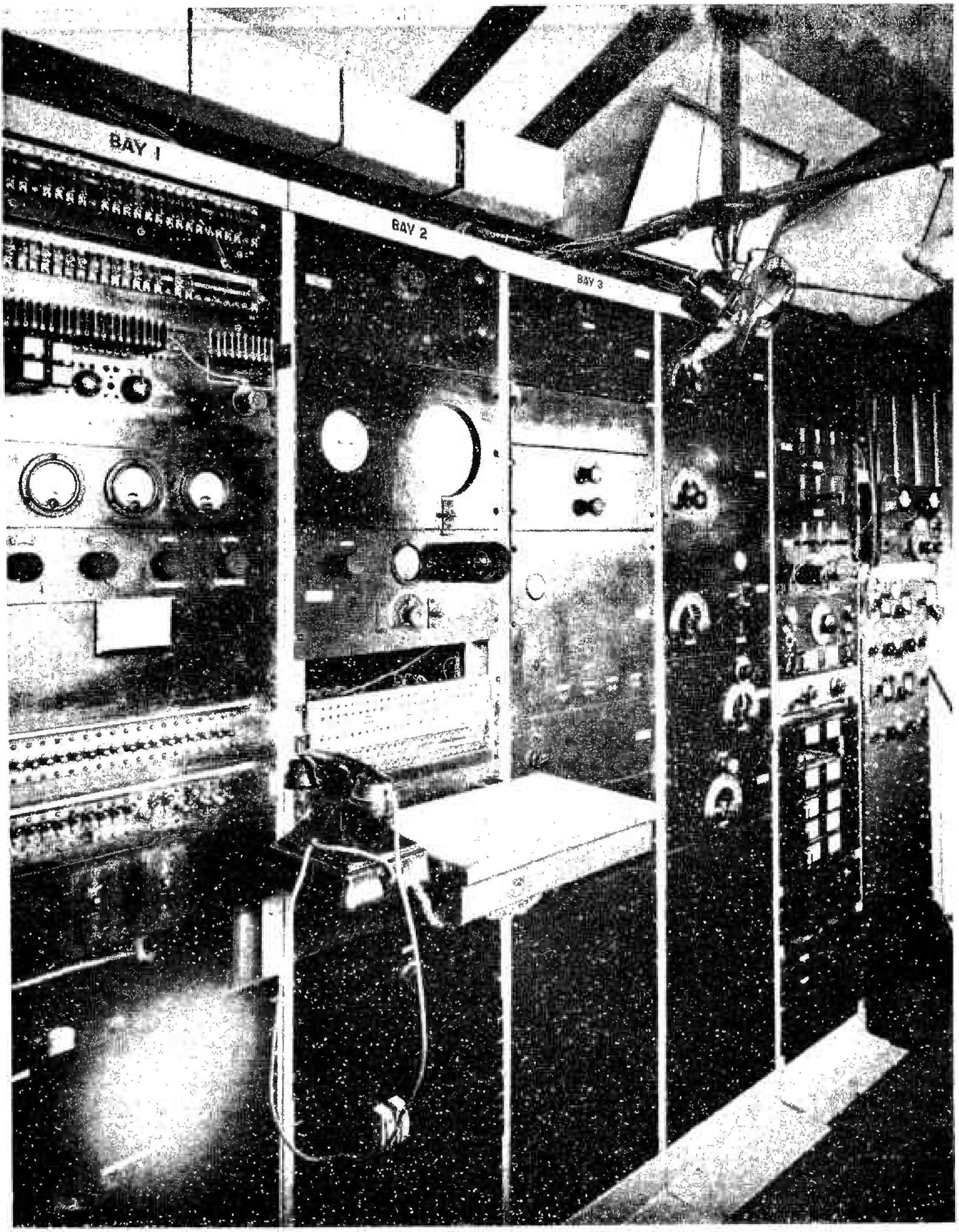

EARLY TYPE P.M.G. RECEIVING STATION, MONT PARK, 1938.

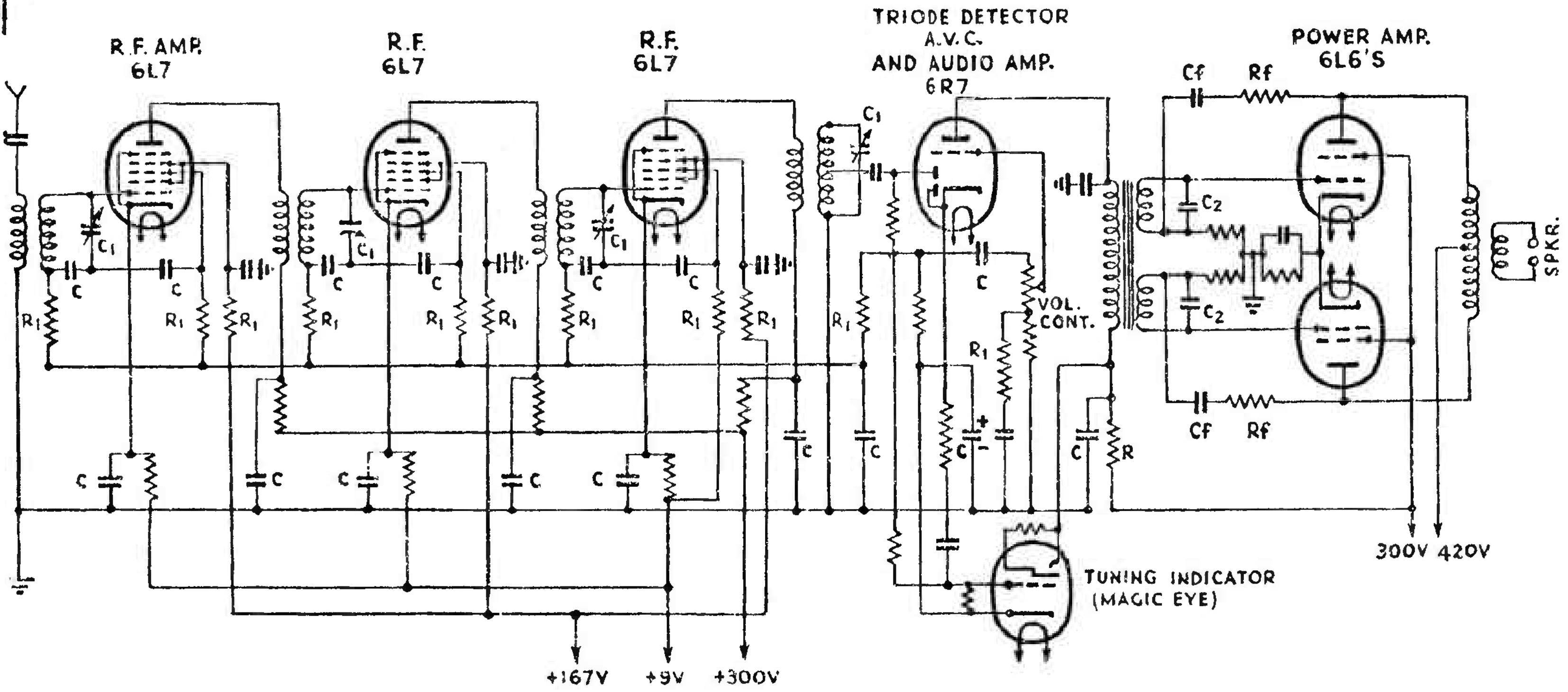

MODERN T.R.F. RECEIVER.

R_1 = Decoupling resistors.

C = Decoupling condensers.

Cf,Rf = Feedback circuit.

C_2 = Parasitic suppressors.

C_1 = 4-gang tuning condenser.

FIG. 4.

This type of receiver is unsuitable for high-frequency reception, but is very satisfactory at medium and low frequencies. The notes to follow on radio frequency amplifiers and detectors in connection with superheterodyne receivers also apply to the design of radio frequency coils and associated circuits of the T.R.F. receiver, and will not be included here. It is not necessary, of course, to have a number of radio frequency stages in a T.R.F. receiver, and a useful type of receiver can be made having a radio frequency stage, a regenerative detector and an audio amplifier. A circuit is not given here, but many types will be found in current radio magazines and handbooks.

2.5 Superheterodyne Receiver. This receiver derives its name from the fact that the desired signal is heterodyned to a lower frequency but is still above audibility (supersonic) and is subject to fixed amplification at the new frequency. There are certain advantages in changing the frequency of the incoming signal so that the resultant frequency is constant for all signal frequencies. These advantages include -

(i) Fixed tuned circuits for amplifying the new frequency.

(ii) More nearly constant sensitivity and selectivity over the wave band.

(iii) Higher possible gain per stage in the intermediate frequency amplifier than in a radio frequency amplifier.

(iv) Improved selectivity, especially when the intermediate frequency is lower than signal frequency.

(v) Better control of over-all fidelity by means of variable selectivity.

Fig. 5 is a block schematic diagram of a superheterodyne receiver.

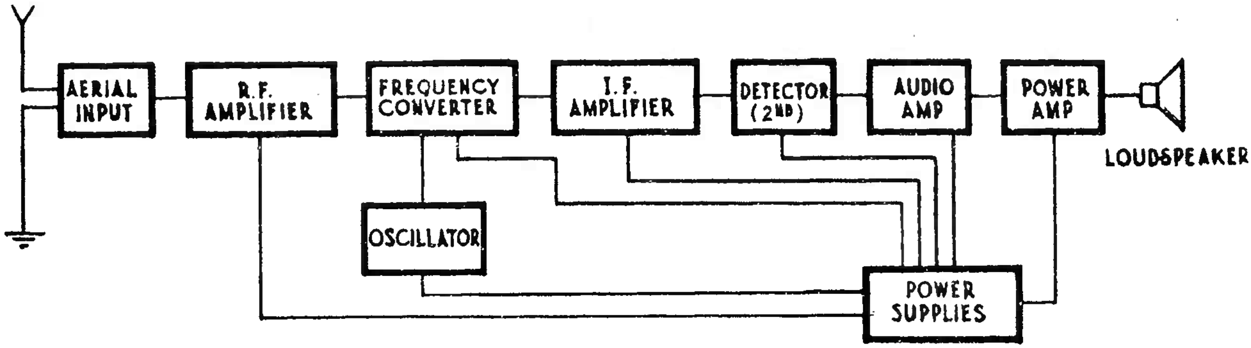

FIG. 5. BLOCK SCHEMATIC OF SUPERHETERODYNE RECEIVER.

3. AERIAL INPUT CIRCUITS.

3.1 The first radio frequency circuit in a receiver is the aerial input circuit, and the difficulties of design are largely due to the fact that the type of aerial with which the receiver will operate is unknown. For example, the aerial may be erected indoors, where it will have poor pick-up qualities and large capacitive and resistive components in its terminal impedance. On the other hand, the aerial may be erected outside as a horizontal wire with a long lead-in, or as a short vertical wire at the highest point of the building and connected to the receiver by a screened cable. These aerials all have different characteristics and will have widely differing effects on the input circuit. Aerials will be discussed in a later Paper.

3.2 An aerial may be coupled to the first tuned circuit of a receiver by inductance and capacitance, separately or combined, and an efficient aerial circuit is a criterion for good receiver performance, although, where field strengths are high, a large aerial may tend to overload and impair the selectivity of the first tuning coil. Also high input voltages invariably mean high values of bias on bias controlled (automatic volume control) stages. The nett result is that the intermediate frequency amplifier may have to handle large inputs when operating towards the lower bend of its characteristics. "Envelope distortion" results, contributing to over-all distortion. Well designed receivers, such as are available for high grade work, will usually handle up to 1 V. input satisfactorily.

The aerial to grid coupling should be arranged so that the energy transfer is relatively uniform over the entire band without being too small. This coupling must also permit the tuned circuit to track properly with other adjustable circuits in the receiver. In the broadcast band, it is usual to use a complex coupling system involving a high-inductance primary resonated at a frequency just below the band to be received.

In short-wave bands, the usual aerial coupling system is a simple mutual inductance commonly proportioned to operate from a 2-wire transmission line of about 100 ohms characteristic impedance.

An aerial is essentially a circuit for transferring voltage induced in it to the grid of the first amplifier valve of a receiver. The voltage induced in the aerial circuit is the product of the field intensity at its location and the "effective" height of the aerial in metres. (This will be explained more fully in a later Paper dealing with field strength measurements.)

/3.3

3.3 Aerial input circuits may be subdivided into three main classes -

(i) Circuits operating from capacitive aerials (usually below 2 or 3 Mc/s).
(ii) Circuits operating from resistance aerials (usually above 2 or 3 Mc/s).
(iii) Loop aerials.

3.4 Capacitive Aerials. Capacitive aerial couplings may be divided into five specific types -

(i) High-impedance capacitive coupling.
(ii) Low-impedance capacitive coupling.
(iii) High-impedance mutual coupling.
(iv) Low-impedance mutual coupling.
(v) Complex coupling.

These types of aerial inputs are shown in Fig. 6. As mentioned before, these aerials are mostly suitable for medium and low frequencies mainly because of the manner in which the values of the constants L and C vary with frequency.

High-Impedance Capacitive Coupling. Fig. 6a is perhaps the simplest from the design stand-point and has a gain that varies directly with frequency over any particular band, and the selectivity curve approximately follows the Universal Resonance Curve. The disadvantages are that the gain varies directly with frequency and the tuning tends to vary with changes of aerial capacity. Details are -

C_1 = Coupling capacitor = 10 $\mu\mu$F.
C_2 = Tuning capacitor = 40-430 $\mu\mu$F.
L_2 = Aerial inductance = 200 μH.
Q = 100.

$$\text{Gain} = Q\,\frac{C_1}{C_1 + C_2}$$

Low-Impedance Capacitive Coupling. Fig. 6b is the low-impedance version of Fig. 6a, and from the formula it will be seen that the gain depends on three factors, Q, C_a and C_1. In general, these factors remain nearly constant over any tuning range and the gain, therefore, is reasonably constant; it does, however, depend directly on the aerial capacitance, C_a, which is a disadvantage. Details -

C_a = Aerial capacitance $\doteqdot$ 200 $\mu\mu$F.
C_1 = Coupling capacitance = 4,000 $\mu\mu$F.
L_2 = Aerial inductance = 200 μH.
C_2 = Tuning capacitance = 40-430 $\mu\mu$F.
Q = 100.

$$\text{Gain} = Q\,\frac{C_a}{C_1}$$

/Fig. 6.

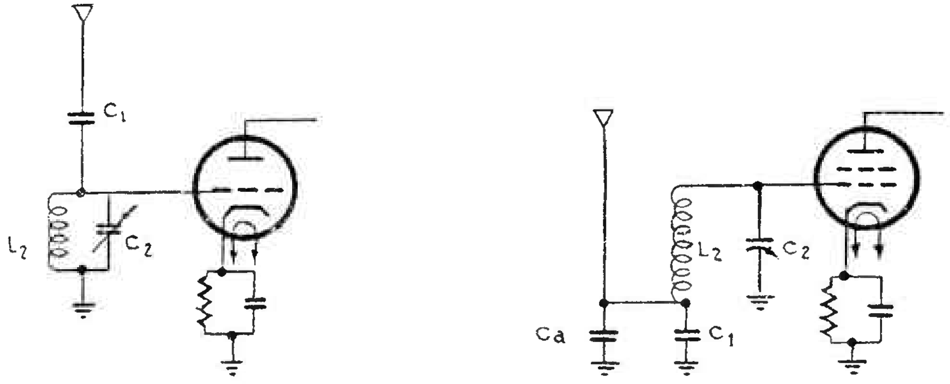

(a) High-Impedance Capacitance Coupled.

(b) Low-Impedance Capacitance Coupled.

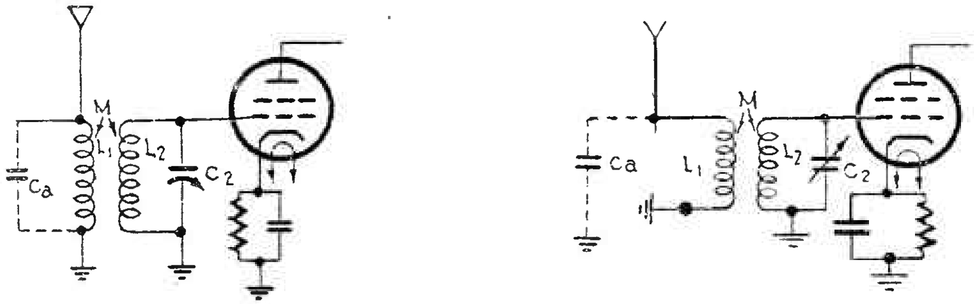

(c) High-Impedance Mutual Coupled.

(d) Typical Low-Impedance Mutual Coupled.

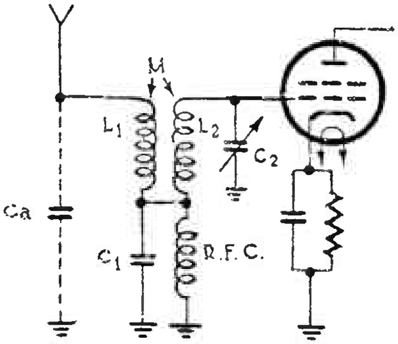

(e) Complex-Coupled Aerial.

FIG. 6. AERIAL COUPLING CIRCUITS.

High-Impedance Mutual Coupling. Fig. 6c is probably the most widely used aerial circuit for use with a separate aerial. The primary resonance is below the tuning range. The gain is practically independent of both frequency and aerial capacitance, and this is a particular feature in receivers which may be connected to various types of aerials. Details -

f_p = Primary resonance = 250 kc/s.
C_a = Aerial capacitance $\doteqdot$ 200 μμF.
C_2 = Tuning capacitance = 40-430 μμF.
L_1 = Primary inductance = 2 mH.
L_2 = Secondary inductance = 200 μH.
M = Mutual inductance = 100 μH.
Q_2 = 100 (Q of secondary).

Gain approximates $\frac{MQ_2}{L_1}$

Low-Impedance Mutual Coupling. Fig. 6d is a similar circuit to Fig. 6c but differs in that the primary resonance is above the tuning range. The gain varies directly with the aerial capacitance and with the frequency squared. This is a distinct disadvantage since a receiver's performance will vary with different types of aerial. The receiver sensitivity may also be noticeably variable over the tuning range. Details -

L_1 = Primary inductance = 10 μH.
L_2 = Secondary inductance = 200 μH.
M = Mutual inductance = 9 μH.
C_a = Aerial capacitance = 200 μμF.
C_2 = Tuning capacitance = 40-430 μμF.

Approximate Gain = $M\ Q_2\ \omega^2\ C_a$

where M and C_a are as above, except that C_a is in farads,
$\omega = 2\pi f$ (in c/s), and
Q_2 = "Q" of secondary inductance.

Complex Coupling. Fig. 6e shows a typical complex coupled aerial circuit. This is used where large aerial gains are required at the low-frequency end of the range, such as in automobile receivers. The gain varies inversely with both aerial capacitance and frequency, the amount of variation depending on the magnitudes of the mutual coupling M and the capacitance coupling $\frac{1}{\omega^2 C_1}$. Details -

L_1 = Primary inductance = 2 mH.
L_2 = Secondary inductance = 200 μH.
M = Mutual inductance = 100 μH.
C_a = Aerial capacitance $\doteqdot$ 200 μμF.
C_1 = Coupling capacitance = 0.004 μF.
C_2 = Tuning capacitance = 40-400 μμF.
Q_2 = 100 (Q of secondary).

$$\text{Approximate Gain} = M \pm \left(\frac{1}{\omega^2 C_1}\right) \frac{Q_2}{L_1}$$

(Note. The inductance and capacitance values shown in Fig. 6 are suitable for the band 550 to 1,500 kc/s.)

3.5 Resistance Aerial Circuits. Aerials operating at or near their resonant frequency act as a resistance. The equivalent circuit of such an aerial is simply a voltage acting in series with a resistance. A typical circuit is shown in Fig. 7; this incorporates a primary inductance for coupling and covers the range 6 to 18 Mc/s. Details -

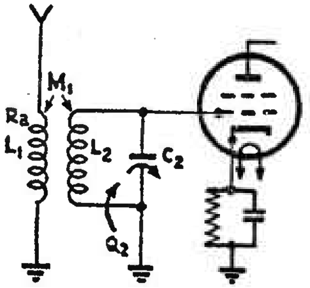

TYPICAL RESISTANCE AERIAL (6-18 Mc/s).
FIG. 7.

L_1 = 20 μH.
L_2 = 2 μH.
M_1 = 1.5 μH.
C_2 = 50-400 μμF.
Q_2 = 100 (Q of secondary inductance).
R_a = Aerial resistance (about 300 ohms).

3.6 Loop Aerials. A loop aerial usually consists of a number of turns of wire in the form of a circle or rectangle. This type of aerial circuit is complete in itself in that it transforms the radiated energy directly into a voltage applied to the grid of the first valve. The selectivity is determined by the Q of the loop inductance and follows the universal selectivity curve. The loop is usually tuned and is widely used in modern broadcast receivers, especially mantel and table models, and in portable receivers. The advantages are simplicity and ease of installation. The disadvantages are the relatively low voltage developed and the difficulty of installing wave-trap circuits to reduce interference. Fig. 8a shows a typical loop aerial, and Fig. 8b the directional properties. This latter characteristic is of great use in Direction Finding and in Field Strength Measurements, and also in reducing interference from local stations that are not in the same general direction as the desired station. The solid line of Fig. 8b shows the theoretical directivity and applies to a well-shielded loop; the dotted lines indicate a lessened sharpening of the nulls due to stray pick-up, and represents the average case.

/Fig. 8.

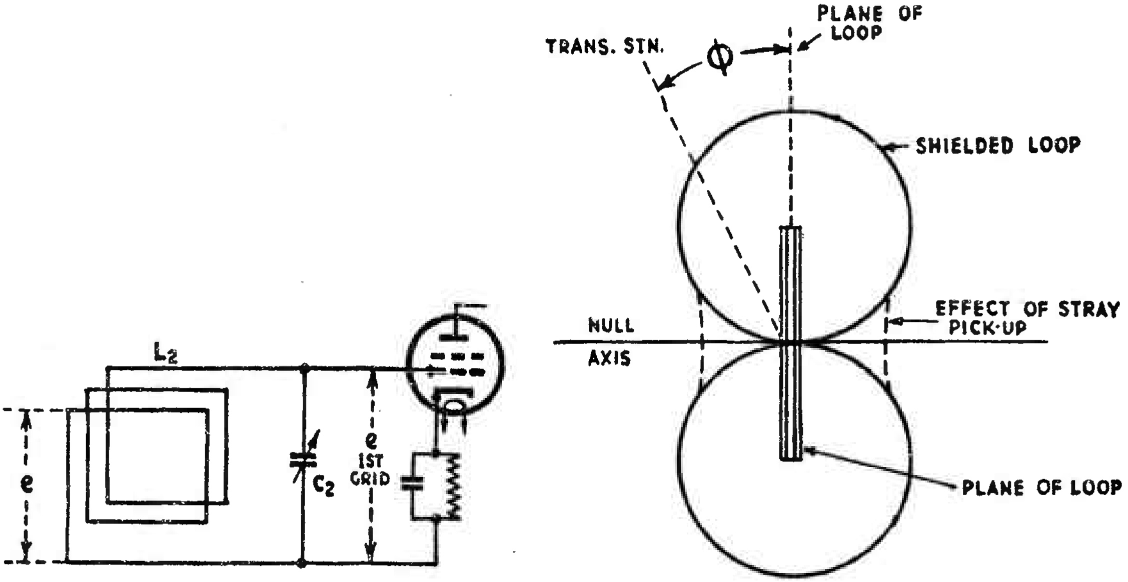

(a) Loop Aerial.

(b) Directional Pattern of Loop.

FIG. 8. LOOP AERIAL.

The voltage per turn inducted in a loop aerial is given by the equation -

$$e = \text{voltage per turn} = \frac{2\pi EA}{\lambda} \text{ Cos } \phi$$

where e = Induced voltage in µV.
E = Field intensity in µV/metre.
A = Area of loop in square metres.
λ = Wavelength of received signal in metres.
ø = Angle between the line of direction taken by the plane of the loop and the line of direction of the transmitting station.

Also, if N = Number of turns in loop,

$$Q = \text{"Q" of loop} = \frac{\omega L}{R}$$

then the voltage delivered to the grid of the first valve is -

$$e \text{ at 1st grid} = \frac{2\pi\ NEAQ}{\lambda} \text{ Cos } \phi.$$

4. SCREEN-GRID AND PENTODE VALVES.

4.1 The next circuit for consideration is the radio frequency amplifier between the aerial and the frequency converter, except in receivers in which the converter is the first valve. Due to the design of special valves, radio frequency amplification has been brought to its present state of usefulness, and a few notes on these valves will be given before Radio Frequency Amplifiers are considered. The two types are -

(i) Screen-grid or tetrode, and
(ii) Pentode.

4.2 Screen-Grid Valve. In Radio I, reference was made to the inter-electrode capacities associated with a triode, these are shown again in Fig. 9a. The most important one is between the anode and grid, which represents a path for radio frequency between the output circuit and the input circuits. This gives rise to oscillation and instability, and prevents full advantage being taken of the amplification properties of a triode. This trouble may be minimised by incorporating some form of neutralising, as is done in high power circuits of transmitters but, for low power circuits, the screen-grid valve obviates the necessity for neutralising.

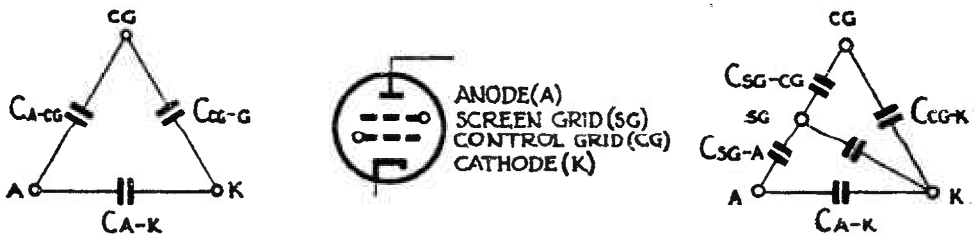

(a) (b) (c)

INTER-ELECTRODE CAPACITY.

FIG. 9.

In the screen-grid valve an additional grid is inserted between the grid and anode, as in Fig. 9b. The resulting inter-electrode capacities are as shown in Fig. 9c. It will be noticed that the anode grid capacity now consists of two capacities in series, anode-screen grid and screen grid-grid, which reduces the over-all grid-anode capacity. In normal operation, the screen grid is given a positive potential equal to about two-thirds of anode voltage, and is effectively earthed for radio frequency by a condenser, C_1, in Fig. 10.

/Fig. 10.

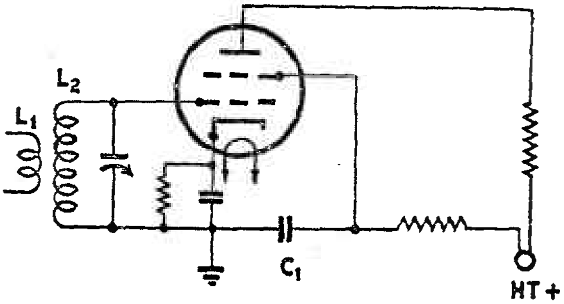

HOW THE SCREEN GRID IS CONNECTED.

FIG. 10.

The following table illustrates the main differences between the screen grid and triode valves.

Type of Valve	Anode Grid Capacity	Anode Resistance	Amplification Factor	Mutual Conductance
Triode	2 to 8 μμF.	20,000/50,000 ohms.	15 to 50	0.9 to 3.5 mA/V.
Screen grid	0.001 to 0.02 μμF.	0.2 to 1 megohm.	100 to 1,500	0.5 to 4 mA/V.

The result of inserting the screen grid is effectively to screen the control grid from the anode, so that changes in anode potential have little effect on the electrostatic field around the control grid. Being closer to the space charge area than the anode, the screen grid exerts an attraction for the electrons which, in the vicinity of the screen grid, come under the stronger influence of the anode and must pass through the screen grid mesh to the anode. In other words, the anode being shielded by the screen grid from the other electrodes, has little effect in withdrawing electrons from the space charge area around the cathode, and the screen grid virtually functions as the anode of a triode. Therefore, as long as the anode voltage is higher than the screen grid voltage, anode current in a screen grid valve depends to a great degree on the screen voltage and not on the anode voltage.

Fig. 11 shows a typical E_a/I_a curve for a screen-grid valve, and it will be noticed that a comparatively large change in anode voltage (say from 100 to 200 V.) has little effect on I_a.

Since $r_a = \frac{dE_a}{dI_a}$, the dynamic anode resistance of a screen-grid valve attains high values (in the example dE_a = 100 V. and dI_a = about 1.5 mA).

$\therefore r_a = \frac{100}{0.0015} = 67{,}000$ ohms.

/Fig. 11.

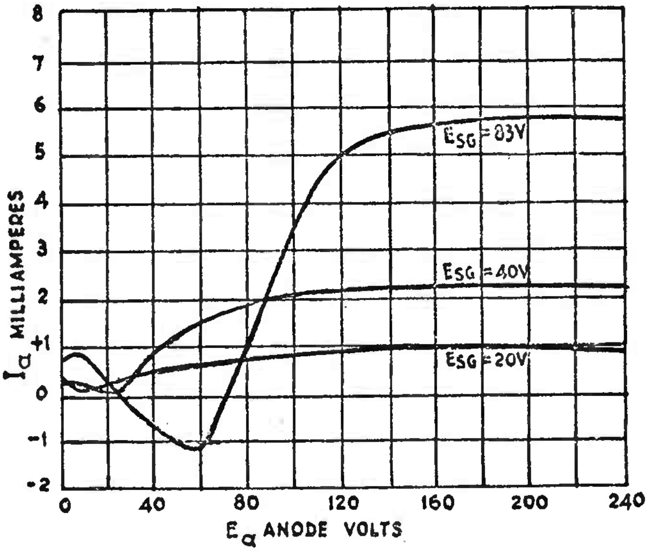

E_a/I_a CURVES FOR SCREEN-GRID VALVE.

FIG. 11.

As shown in the table, the mutual conductance does not vary appreciably but, since r_a changes, the amplification factor must also change because $\mu = g_m r_a$.

4.3 Pentode (Five Electrode). The screen-grid valve has one disadvantage. When electrons are bombarding the anode in great numbers and at high velocity, the impact of the electrons against the anode causes the emission of electrons by the anode. This effect is termed "secondary emission." Since the screen grid is at a positive potential it may collect these electrons, causing an increase in screen grid current and a decrease in anode current or, as it is usually termed, "a dip." This dip will produce serious anode distortion and resultant harmonic generation.

By introducing an additional grid between the screen grid and the anode, and keeping it at ground potential, the electrons emitted by the anode will be repelled and returned to the anode without reaching the screen. A pentode symbol is shown in Fig. 12a, and the anode characteristics of a screen grid and pentode are shown in Fig. 12b, which brings out the point referred to above. The pentode has replaced the screen grid or tetrode in modern receivers. This valve may be regarded as a constant current generator over the usual operating range, since the anode current is essentially independent of anode voltage.

/Fig. 12.

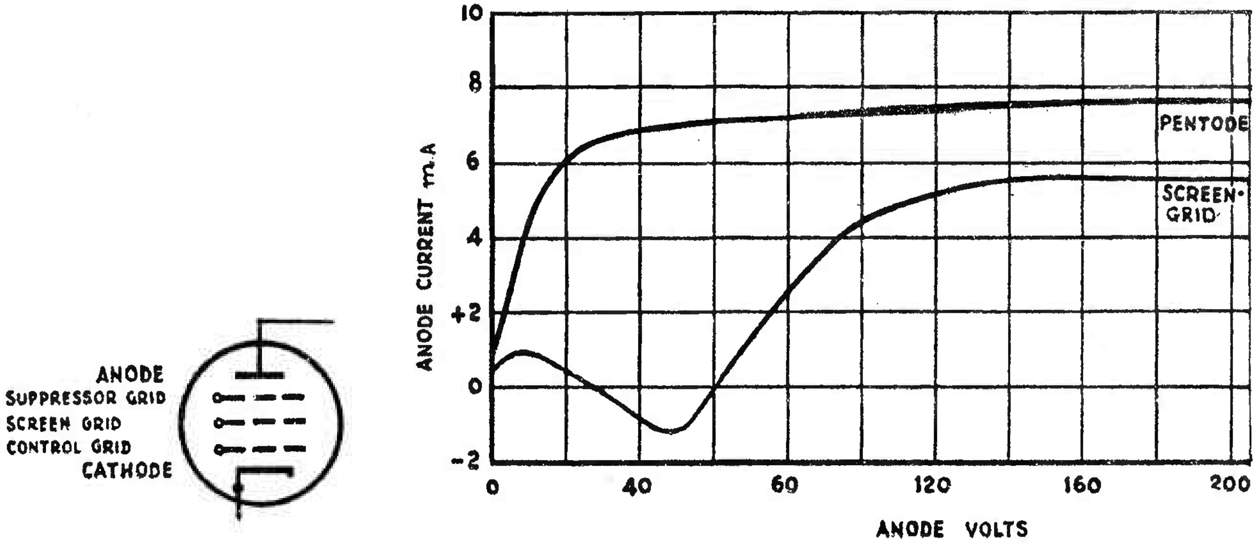

(a) Symbol.

(b) Comparison of Pentode and Screen Grid Anode Characteristics. (Note Removal of "Dip.")

FIG. 12. PENTODE VALVE.

If, instead of considering the valve as a voltage generator, it is considered as generating the anode current $I_a = E_g g_m$, then the voltage across the load may be determined.

$$I_a R_L = E_g g_m R_L$$

the stage gain is thus -

$$\text{Gain} = \frac{I_a R_L}{E_g} = g_m R_L$$

The application of pentodes in audio amplifiers will be covered in the appropriate section.

4.4 Pentode (Variable-Mu) or Tetrode. Dependence of amplification of tuned radio frequency amplifiers upon transconductance makes possible the control of amplification by variation of operating voltages. This is conveniently performed by arranging for an increase in signal voltage to cause an increase in bias voltage.

The ordinary pentode has a disadvantage when operating near the lower end of the characteristic curve. The sharp cut-off precludes the satisfactory use of automatic volume control and introduces distortion also with large grid swings. The requirements of automatic volume control are that the valve bias may be varied over a fair range without introducing distortion, the variation of bias producing a corresponding variation of μ, thus effectively controlling the amplification of signals.

/Fig.

Fig. 13 shows the characteristics of a variable-mu valve and a sharp cut-off valve. The difference on the lower position of curve is evident.

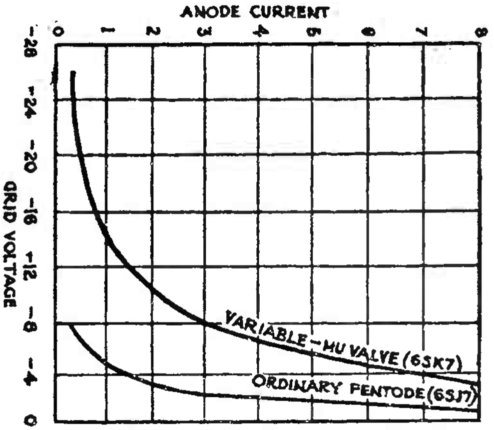

COMPARISON OF PENTODE VALVES.
FIG. 13.

This variable-mu characteristic is obtained by variation of the design of the control grid structure, for example, by tapering the over-all diameter, variation of spacing, etc.

The variable-mu type of valve also functions to minimise the effect of cross-modulation in a radio receiver (see later).

5. RADIO FREQUENCY AMPLIFIERS.

5.1 The addition of one or more stages of signal amplification preceding the detector in the case of a T.R.F. set, or the converter in a superheterodyne, improves the sensitivity, selectivity and signal noise ratio of receivers. In a superheterodyne, there are a number of additional advantages -

(i) Minimises the effect of noise due to the converter stage.
(ii) Improves the image ratio.
(iii) Reduces intermediate frequency responses.
(iv) Reduces cross-modulation.
(v) Reduces re-radiation from oscillator/converter.

5.2 Radio frequency amplifiers for radio receivers are required to be tunable over a range of frequencies from a minimum of 150 kc/s to a maximum of about 50 Mc/s. (Higher frequencies are in use, of course, but require different receivers.) Special problems are involved due to the need for covering a range of frequencies; for example, the gain and selectivity of an amplifier may vary widely over the frequency range, leading perhaps to instability at the high-frequency end. Again, owing to inter-electrode capacitance coupling, the grid input admittance of a radio frequency amplifier valve may be comparable with the reciprocal of the dynamic resistance of the tuned circuit to which it is connected.

An anode grid capacitance of 0.005 $\mu\mu F$ can have serious effects on the gain at frequencies of about 2 Mc/s and above.

The section on parallel resonant circuits in Paper No. 1 of Radio I should be reread at this stage.

5.3 A radio frequency amplifier may be classed as a Class A voltage amplifier in which the load impedance is supplied by a resonant circuit. Such amplifiers are used to amplify signal frequency voltages in radio receivers, in which case they are termed Tuned Radio Frequency Amplifiers, and also to amplify intermediate frequency voltages in superheterodyne receivers. The characteristics of Class A amplifiers are given in Paper No. 4 of Radio I.

5.4 Tuned Voltage Amplifier. The important characteristics of a Tuned Voltage Amplifier are -

(i) Amplification at resonance.
(ii) Variation of amplification with frequency in immediate vicinity of resonance.
(iii) The way in which the amplification changes as the resonant frequency is varied by tuning.

Consider the typical 2-stage amplifier shown in Fig. 14. Here, the input voltages applied to the grid cathode circuit of the first radio frequency valve are obtained from the parallel resonant circuit L_2C_1.

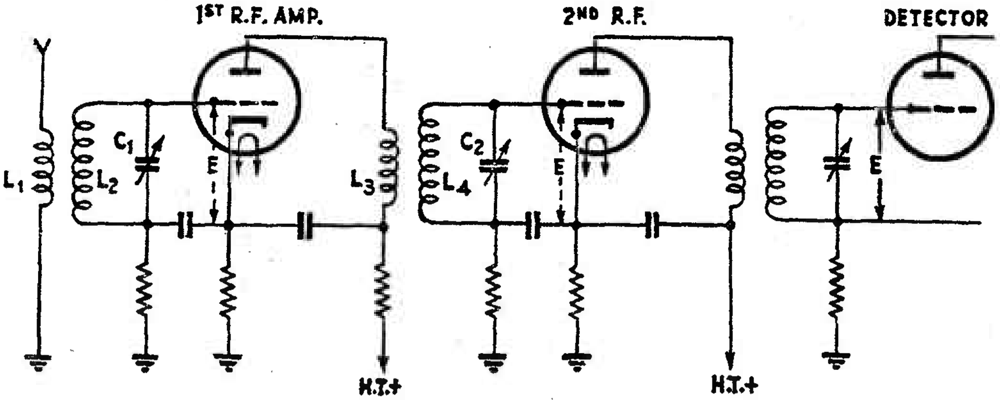

TYPICAL 2-STAGE RADIO FREQUENCY AMPLIFIER.

FIG. 14.

When an incoming signal e.m.f. is induced in the secondary circuit L_2C_1 at resonance, a voltage is built up across this parallel combination. The value of this e.m.f. is dependent upon one or more of the following conditions -

(i) The step-up ratio of the radio frequency transformer.
(ii) The impedance of the parallel combination.
(iii) The input impedance of the valve between the grid cathode capacity.
(iv) The resistance of the L_2C_1 circuit.
(v) The reflected resistance of the mutual coupling, M, between the windings.
(vi) The grid bias voltage.
(vii) The tuning of L_2C_1.

It may be seen, therefore, that if the number of turns in the radio frequency transformer is larger in the secondary than in the primary, a greater e.m.f. will be applied across the secondary circuit at the points E.

If the impedance of the circuit L_2C_1 is kept large by maintaining a large L to C ratio, the e.m.f. across the parallel combination will also be greater. This is an important consideration in the radio frequency amplifier, particularly in receiving circuits, since the tube is to function primarily as a voltage amplifier.

The input impedance in a voltage amplifying device must also be maintained as high as possible, particularly when small input voltages are being received. The input impedance may be kept high by using a valve having a low grid cathode capacity, and by preventing a flow of grid current during the period in which signal voltages are being received. This latter condition may be fulfilled by maintaining the proper bias on the valve, so that, when a positive potential is applied to the grid from an incoming signal, a minimum number of electrons will be attracted to the grid, thus reducing the grid current flow in the input circuit.

5.5 Voltage Gain of Radio Frequency Amplifier (Transformer Coupled).

To estimate the voltage gain of a transformer coupled radio frequency amplifier, the following points need to be considered -

(i) Input voltage.
(ii) Primary and secondary inductance.
(iii) Mutual inductance.
(iv) Primary and secondary circuit resistances.
(v) Amplification factor of valve.

In Fig. 15b, μE_g represents the voltage generated by the valve of Fig. 15a (which shows part of Fig. 14),

where μ = amplification factor,
E_g = input voltages,
r_a = anode impedance of the valve,
M = mutual coupling between L_3 and L_4, and
E_o = output voltage across load impedance Z_o.

/Fig. 15.

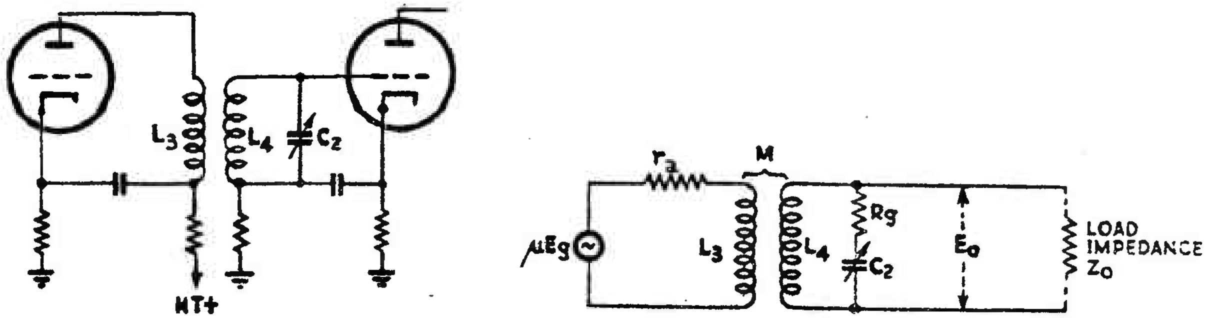

(a) Circuit. (b) Equivalent of Fig. 15a.

FIG. 15. VOLTAGE GAIN OF R.F. AMPLIFIER.

The approximate gain at resonance for a triode valve may be computed as -

$$\frac{E_o}{E_g} = \frac{\mu E_g \ Z_o}{r_a + Z_o} \times \frac{L_3}{M}$$

For a pentode, the gain approximately equals $g_m \, \omega M Q$

where g_m = Mutual conductance of valve,
ω = 2π × resonant frequency, and
Q = "Q" of secondary inductance.

It may be shown that, for each frequency to which L_4C_2 is adjusted, there is some value of M which gives the best results, depending on whether selectivity or fidelity is required.

5.6 Selectivity Response. If it is desired to obtain an extremely selective response, so that the voltage amplification is sharp at one frequency, as in Fig. 16a, then the value of coupling should approach zero. If fidelity is required, as in Fig. 16b, the value of M (mutual inductance) must be adjusted accordingly. Hence -

(i) Decrease of coupling "sharpens" tuning and narrows band-width.

(ii) Increase of coupling "broadens" tuning and widens band-width.

Most broadcast receivers are required to possess reasonable selectivity and band-width, and the mutual coupling, M, is adjusted to a mean value.

/Fig. 16.

(a) Sharp Tuning.   (b) Broad Tuning.

FIG. 16. SELECTIVITY RESPONSE.

5.7 **Direct Coupling.** Fig. 17 illustrates another method of coupling known as "direct coupling" or sometimes "tuned anode." In this coupling, the voltage developed across the tuned circuit LC is transferred to the following valve through the isolating coupling condenser C_c.

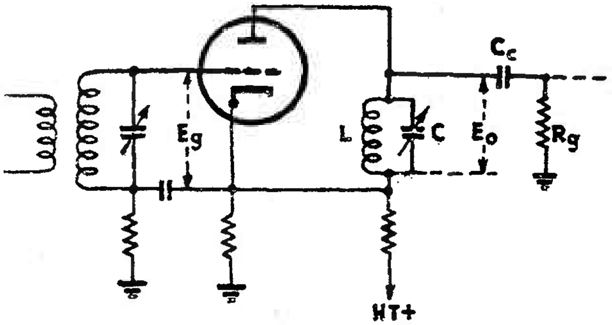

FIG. 17. DIRECT COUPLING.

The voltage gain may be computed at resonance as follows -

$$\text{Gain} = \frac{E_o}{E_g} = \mu E_g \times \frac{Z_o}{r_a + Z_o} \quad \text{(symbols as before)}$$

$$\left(Z_o = \frac{L}{CR} \text{ of tuned circuit}\right)$$

For a pentode valve, the approximate amplification A at resonance equals -

$$A = g_m \omega L Q$$

where g_m = Mutual conductance of valve,

$\omega = 2 \times \pi \times f$ (resonance),

L = Inductance in henrys, and

Q = "Q" of coil.

5.8 Another method of coupling is known as Band-Pass Coupling, and this is described later.

/5.9

5.9 Variation of Amplification with Frequency. The amplification of a tuned radio frequency amplifier varies approximately with frequency in the same way as does the current in a series resonant circuit having a Q the same as the "effective Q" of the transformer. The amplification at any frequency off resonance may then be determined by reference to the universal resonance curve. A typical example is shown in Fig. 18.

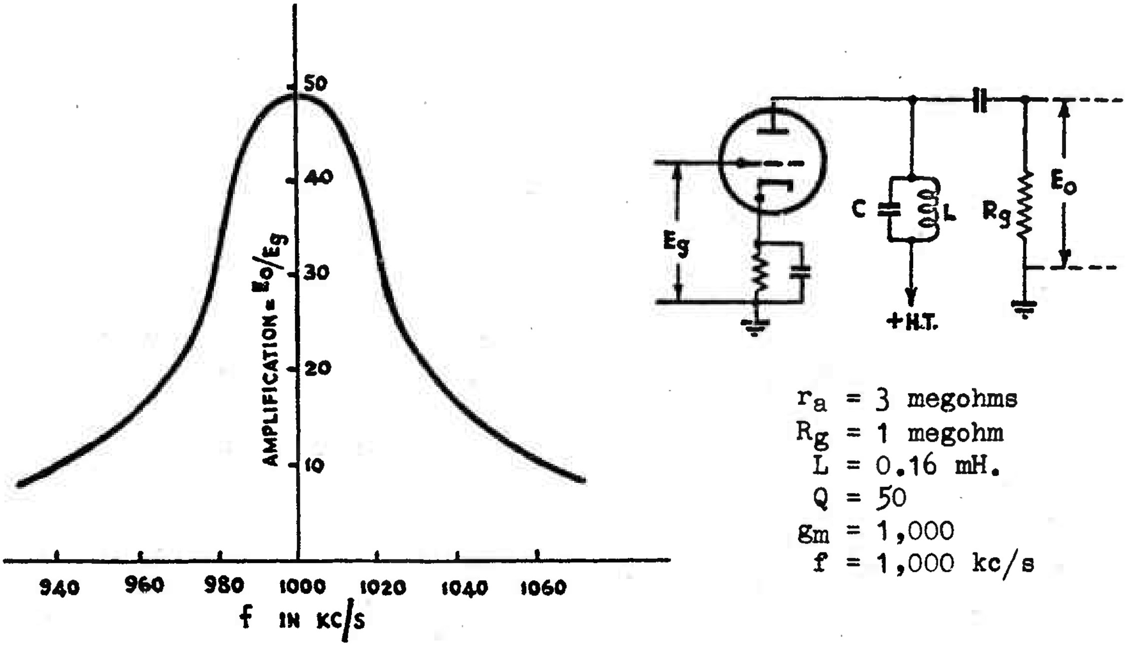

r_a = 3 megohms
R_g = 1 megohm
L = 0.16 mH.
Q = 50
g_m = 1,000
f = 1,000 kc/s

FIG. 18. VARIATION OF AMPLIFICATION WITH FREQUENCY.

This is, in effect, the selectivity of the circuit and may be found approximately by the formula -

$$S = \frac{1}{\sqrt{1 + 4Q^2 \Delta^2}}$$

$$\text{where } S = \frac{\text{voltage at frequency } f}{\text{voltage at resonance } f_r}$$

$$Q = \frac{\omega L}{R} \text{ or more accurately "effective Q".}$$

$$\Delta = \frac{f - f_r}{f_r} \text{ or } \frac{f_r + f}{f_r} \text{ (depending which side of resonance f is).}$$

The "effective Q" mentioned is the Q of the whole transformer, which is always less than the Q of the secondary alone.

$$\text{"Effective Q"} = \frac{R_{sec}}{R_{sec} + \frac{(\omega M)^2}{r_a}}$$ but, in practical amplifiers, it varies between 0.59 and 0.80.

/5.10

5.10 The characteristics of a valve required for a radio frequency amplifier differ from those of audio frequency amplification, owing to the different nature of the anode load impedance. Tuned circuits discriminate in favour of a relatively narrow band of frequencies and require a high valve slope resistance for satisfactory operation, the valve resistance being in parallel with the tuned circuit with consequent damping of the latter. The impedance of the tuned circuit is usually high, so that a high stage gain is possible. Difficulties due to feedback are greatly increased, therefore, and the anode grid capacitance must be as low as possible if instability is to be prevented. Another difference between radio frequency and audio frequency amplification is that, owing to the selective properties of radio frequency tuned circuits, second harmonic radio frequency distortion due to valve curvature is permissible and has no distorting effect on the modulation envelope. The most suitable valve is a tetrode or pentode, since either can have a high r_a and low anode grid capacitance. The pentode has the more suitable characteristics for the case where large output voltages are required.

6. INTERMEDIATE FREQUENCY AMPLIFIERS.

6.1 The Intermediate Frequency Amplifier is a special case of a radio frequency amplifier operating at a fixed frequency. The values of L and C forming the tuned circuits are not limited by the need for a variable capacitance range, but may be chosen to give the best performance as regards selectivity and amplification. High selectivity demands high Q values for the coils and, for a given selectivity, the required Q value is linearly proportional to frequency. For example, a Q of 50 at 110 kc/s gives the same selectivity as a Q of 211 at 465 kc/s. The amplification of an intermediate frequency stage is largely fixed by the impedance of the tuned circuits $(\frac{L}{CR})$ and is greatest when L is large and C is small (see Radio I on tuned circuits). There is a limit to the possible reduction of C, for valve and stray capacitances must not form a large proportion of the tuning capacitance; variation of valve capacitance due to automatic gain control (or automatic volume control) and replacement of valves may otherwise cause serious detuning. Furthermore, these stray capacitances have resistive components which reduce the Q value and impedance of the circuit. Inductance or capacitance tuning may be employed, but the former is preferable because a variable inductance is less affected by temperature change than a variable capacitance. Moreover, fixed capacitances of the silvered mica type may be made with very small temperature coefficients.

/Single

Single tuned circuits are not normally used in an intermediate frequency amplifier, since they give a poor selectivity curve with a narrow pass-band and poor attenuation outside the pass range. Coupled circuits give a more satisfactory curve and a fairly flat pass-band. Often coupled circuits have identical L C and R values,. an important advantage in manufacture.

6.2 Intermediate Frequency Circuits are required to provide -

- (i) Amplification.
- (ii) Selectivity.
- (iii) Application of automatic gain control.
- (iv) Application of variable selectivity, if required.

6.3 As mentioned earlier, band-pass coupling is generally used in intermediate frequency amplifiers, since they possess characteristics desirable in this amplifier service. The requirements insofar as selectivity is concerned are -

- (i) The response should be reasonably uniform over the pass-band of frequencies.
- (ii) The response should be well down at ± 10 kc/s off resonance.
- (iii) The response at ± 20 kc/s should slope steeply from (ii).

Fig. 19a shows a typical band-pass coupling circuit, and Fig. 19b shows the resultant response curve. This arrangement is commonly used in intermediate frequency amplifiers, and is very desirable for the amplification of modulated waves because it can provide substantially constant amplification for all the essential sideband frequencies contained in the wave, while at the same time discriminating sharply against frequencies that are outside the pass-band.

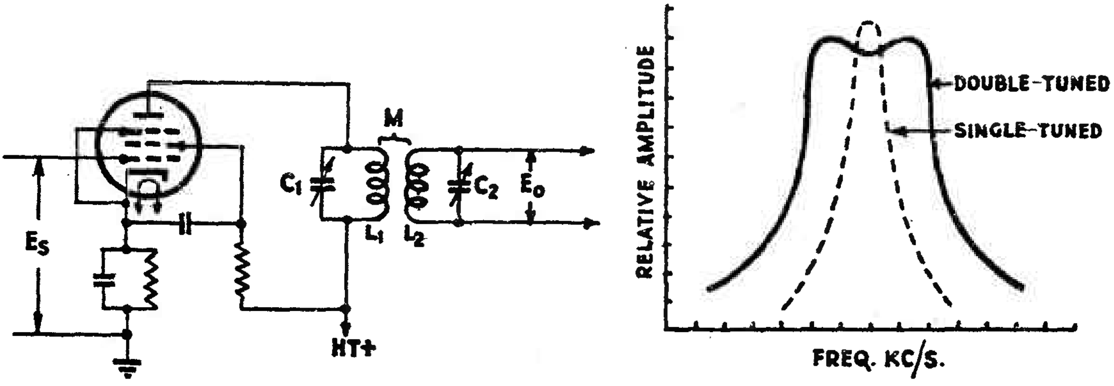

(a) Circuit. (b) Response of Fig. 19a.

FIG. 19. BAND-PASS COUPLING.

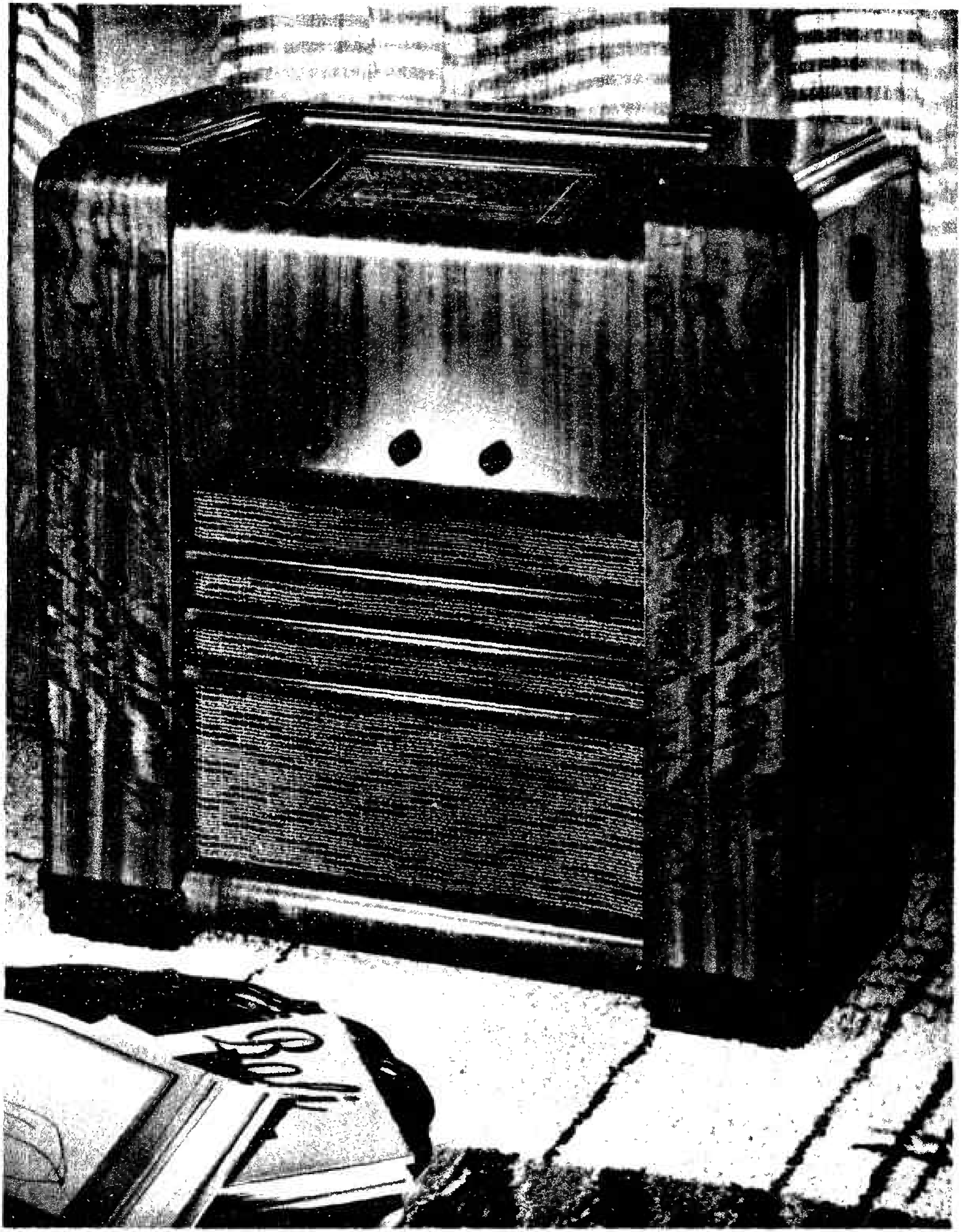

MODERN RADIO RECEIVER.
(A.W.A. RADIOLA 709C.)

$$\text{Amplification} = \frac{g_m\ K\ \omega_o \sqrt{L_s L_p}}{K^2 + \dfrac{1}{Q_p Q_s}}$$

where g_m = Mutual conductance of valve.
K = Coefficient of coupling between primary and secondary.
$\omega_o = 2\ \pi\ f_{res}$,
Q_p = Q of primary circuit,
Q_s = Q of secondary circuit,
$L_p L_s$ = Inductances of primary and secondary respectively,

$$K = \frac{M}{\sqrt{L_p L_s}}$$

M = Mutual inductance of primary and secondary.

$$\text{Maximum possible amplification} = g_m \frac{\omega_o \sqrt{L_p L_s} \sqrt{Q_p Q_s}}{2}$$

Fig. 19b shows the difference between single-tuned and double-tuned coupling, and it will be seen that the latter is of the doubled lumped type giving band-pass characteristics. If the circuits are tuned to the same frequency, and the Q's of the primary and secondary are equal, the frequencies of the two lumps are given by the following simple expression -

$$\omega = \frac{\omega_o}{\sqrt{1 \pm K}} \text{ where symbols are as above.}$$

If the primary and secondary circuit Q's are approximately the same, then the width of the response band may be determined approximately from the relation -

$$\frac{\text{Width of response}}{\text{Mean frequency}} = 1.2\ K$$

where K = coefficient of coupling.

Substantially constant response is then obtained over the band when the primary and secondary Q's are so related that -

$$Q_p Q_s = \frac{1.75}{K}$$

6.4 Selectivity Curves. Fig. 20a shows typical selectivity curves of tuned amplifiers for one stage and two stage single-tuned coupling and one stage band-pass. The superiority of the band-pass amplifier is its ability to discriminate against frequencies appreciably off resonance, while at the same time responding uniformly to a band of frequencies about resonance.

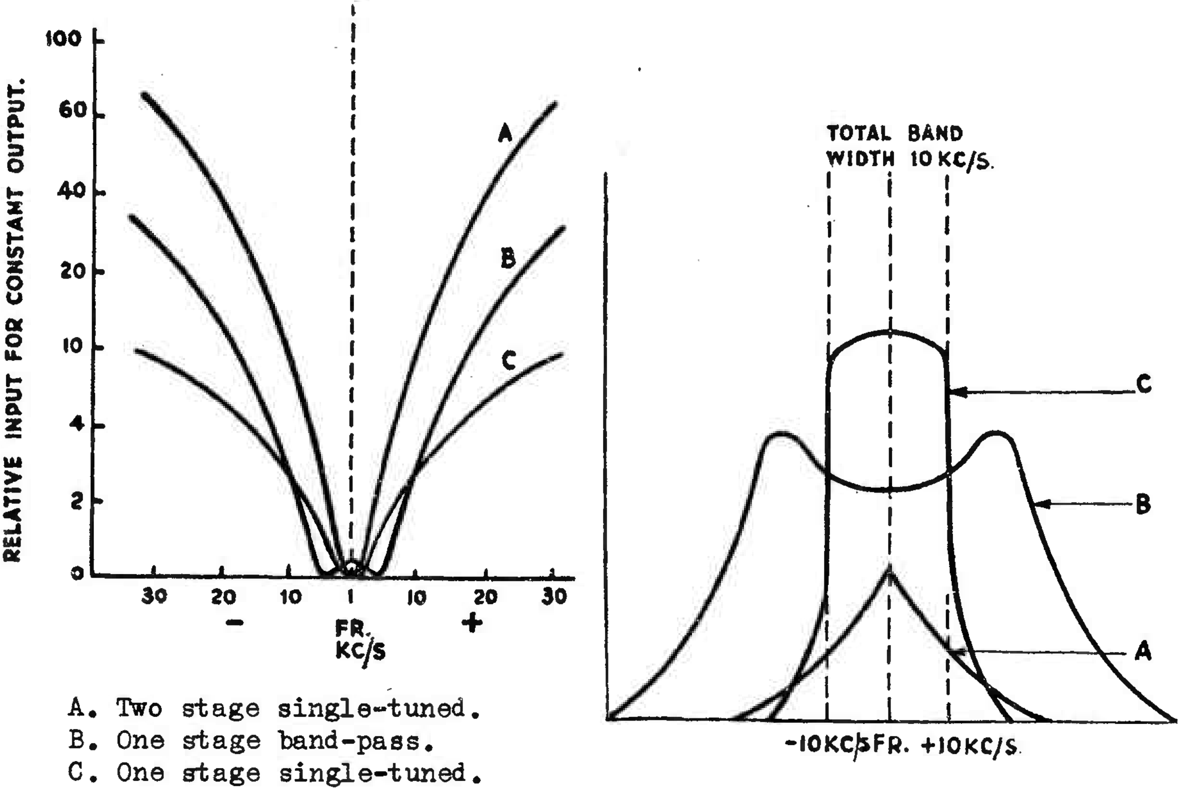

A. Two stage single-tuned.
B. One stage band-pass.
C. One stage single-tuned.

(a) Curves for Tuned Amplifiers. (b) Effects as Indicated in Text.

FIG. 20. SELECTIVITY CURVES.

Band-pass characteristics may be obtained in various ways by varying the coefficient of coupling or Q of each of the coupled circuits by -

(i) Overcoupling L_p and L_s tuned to the same frequency.
(ii) Decreasing the circuit Q of L_p and L_s with shunt resistance.
(iii) Detuning the secondary, with or without changing the coupling.
(iv) Combining a simple resonant circuit with a coupled combination.

Fig. 20b illustrates some effects of the above.

Curve A is the effect when high Q circuits are loosely coupled and tuned to the same frequency. Curve B was obtained by methods (i) and (iii).

Curve C is a desirable shape for passing a given band-width, and may be obtained by applying discriminately any of the methods until the desired characteristic is obtained, preferably on an oscilloscope.

/6.5

6.5 Intermediate Frequency Stage Gain. The stage gain is usually more than can be conveniently obtained with tuned radio frequency stages, since a high L/C ratio may be employed in the coupling circuit, no provision being needed for tuning over a wide frequency range. This fixed tuning enables the circuit to develop its maximum gain.

These stages, in fact, provide most of the gain and adjacent channel selectivity possessed by the receiver.

The final stage feeding the diode detector usually requires special design to take into account the input impedance of the diode.

It can be shown that the voltage developed across the windings of a radio frequency transformer closely approach -

Primary Winding

$$E_p = \frac{\mu E_g Z_p}{r_a + Z_p} \text{ volts}$$

Secondary Winding

$$E_s = \frac{\mu E_g Z_p}{r_a + Z_p} \times \frac{L_s}{M}$$

where μ = Amplification of valve,
Z_p = Load impedance,
r_a = Anode resistance of valve,
L_s = Inductance of secondary winding, and
M = Mutual inductance between primary and secondary.

At the relatively low fixed intermediate frequencies generally used (175 kc/s to 465 kc/s), it is possible to have a relatively large turns ratio, thus increasing the voltage across the secondary winding and resulting in greater gain and increased sensitivity of each intermediate frequency stage.

The choice of the intermediate frequency will be discussed in the next Paper.

Fig. 21 is the intermediate frequency section of a modern receiver; the band-pass circuits should be noted.

/Fig. 21.

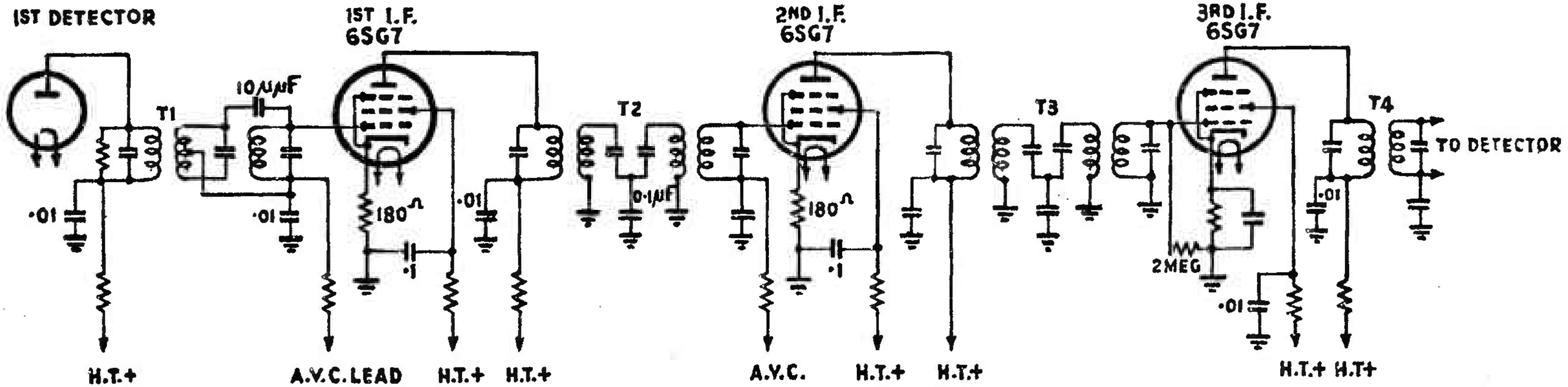

Transformers T1, T2, T3, T4 are all inductance tuned transformers
(that is, iron-dust coil adjustment).

INTERMEDIATE FREQUENCY SECTION OF A MODERN COMMUNICATION RECEIVER WITH A FREQUENCY RANGE 500 kc/s TO 32 Mc/s.

FIG. 21.

7. VARIABLE SELECTIVITY.

7.1 It has become fairly general practice now to provide receivers with some method of varying the pass-band of the tuned circuits to enable the selectivity to be increased. Since the intermediate frequency circuits operate at a fixed frequency and, therefore, have fixed values of L and C, they afford a convenient place to control the selectivity.

The degree of selectivity required to suppress adjacent channel interference depends to a large extent on the strength of the received signal. For local station reception, the selectivity can be reduced with consequent improvement in fidelity, but, for distant station reception, very high selectivity is often necessary.

7.2 Variable selectivity may conveniently be divided into asymmetrical (one sideband only is affected) and symmetrical variation (both sidebands affected). Each has its merits, and they are compared in the following table -

Asymmetrical	Symmetrical
One sideband only is reduced, that suffering from interference.	Both sidebands are reduced.
Tuning is critical and the carrier must be located correctly.	Tuning is not very critical.
Amplitude (harmonic) distortion can be high if tuning not correct.	Amplitude distortion is small.
Frequency distortion is not so appreciable as only the high-frequencies in one sideband are affected.	Frequency distortion may be considerable, because the high-frequencies in both bands are reduced.
Selectivity is better for given fidelity when interference is on one side of the carrier.	Selectivity is better when interference occurs on both sides of the carrier.
Signal-to-noise ratio is approximately -3 db down on that for symmetrical variable selectivity.	

/Amplitude

Amplitude distortion, due to asymmetrical variable selectivity, can be reduced to a low value if there is symmetrical response for sidebands up to ± 1,500 c/s on either side of the carrier. The audio frequency output with two sidebands is +6 db above that with one sideband, whilst noise is only 3 db up due to the increased bandwidth. (Circuit and valve noise is proportional to the square root of the band-width, whereas the audio signal is directly proportional.)

7.3 Asymmetrical Variation. Asymmetrical variation is seldom used because of the need for skilled operation if the results are to be satisfactory. However, in receivers required for communication purposes, it is almost essential. Asymmetrical variation may be achieved by detuning the oscillator to locate the carrier on the side of the selectivity curve, or by detuning one side of the intermediate frequency coupled circuits. The second method has been used and functions by varying the total pass-band, whereas the first method varies only the relative widths of the pass region of each band. Fig. 22 shows portion of the circuit of a radio receiver provided with asymmetrical variation of selectivity.

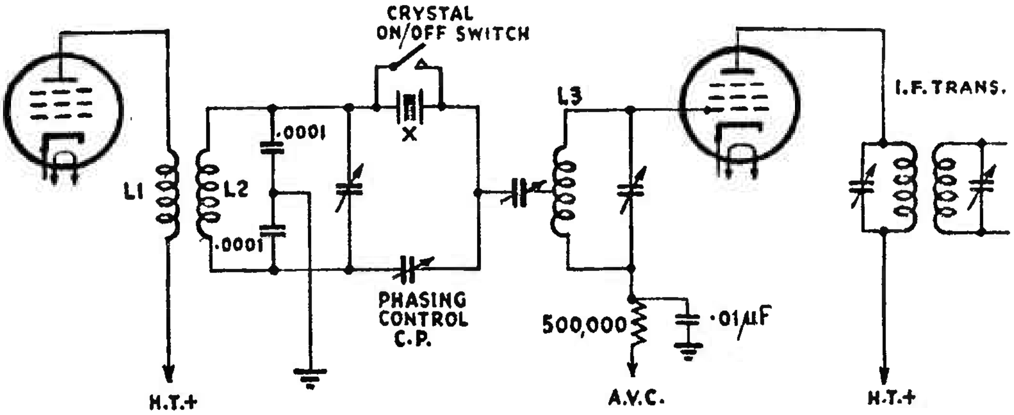

L1, L2, L3 = I.F TRANSFORMER

CIRCUIT FOR ASYMMETRICAL VARIATION OF SELECTIVITY.

FIG. 22.

Suppose a signal tuned in with an interfering signal causing a heterodyne on one sideband. The crystal X is switched in and the phasing control carefully adjusted until the heterodyne disappears. Reception is now obtained by detection of the sideband not subject to interference, that is, if the signal is being interfered with by a signal on a lower frequency, the upper sideband of the intermediate frequency will provide the intelligence, and vice versa. Careful tuning and manipulation of controls are essential for good results. The crystal frequency is the same as the intermediate frequency and, in lining up the receiver, the intermediate frequency coils are adjusted to the crystal frequency to ensure correct operation.

7.4 Symmetrical Variation. Symmetrical variation of selectivity may be accomplished by -

(i) varying the mutual inductance coupling between the intermediate frequency circuits,

(ii) damping the circuits, and

(iii) the introduction of a crystal filter. A combination of (i) and (iii).

To illustrate the latter, the five selectivity positions of a modern superheterodyne receiver are shown in Figs. 23 to 27, together with the selectivity curve associated with each position. In this particular case, it is not possible to eliminate entirely a heterodyne interference, but its effect may be considerably reduced.

These illustrations of asymmetrical and symmetrical variation of selectivity must not be regarded as the only circuits for accomplishing this purpose, there are many other methods depending on the actual receiver requirements.

/Fig. 23.

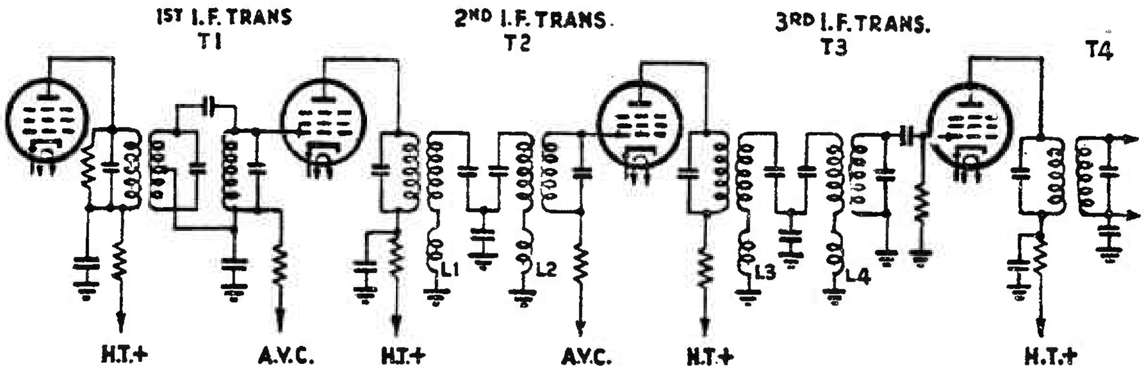

Coils L_1 to L_4 provide the required increase of coupling.

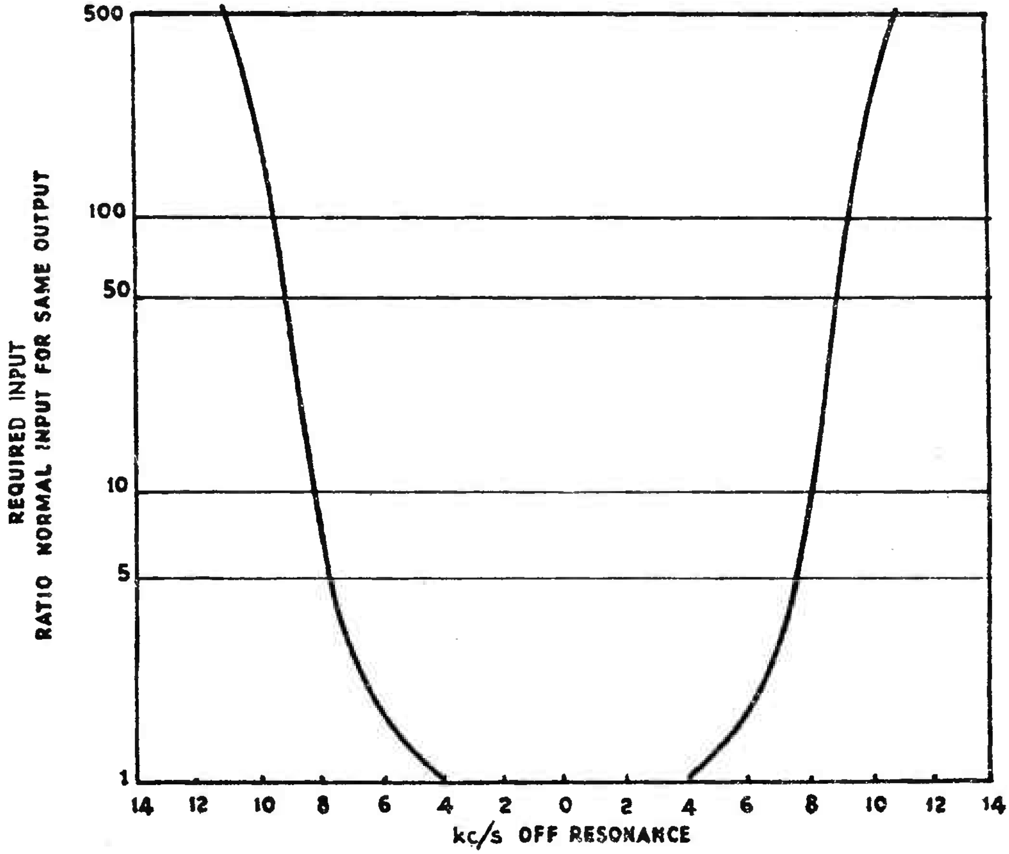

SELECTIVITY POSITIONS OF A MODERN SUPERHETERODYNE RECEIVER.

POSITION 1. HIGH-FIDELITY CIRCUIT AND CURVE.

FIG. 23.

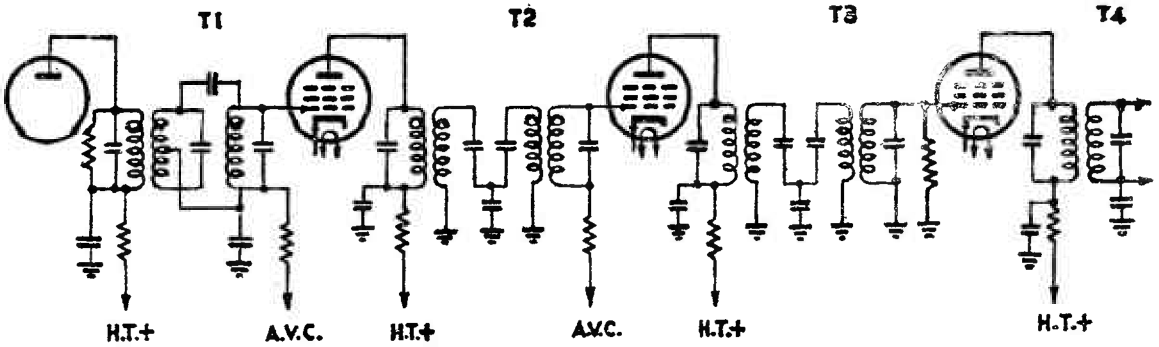

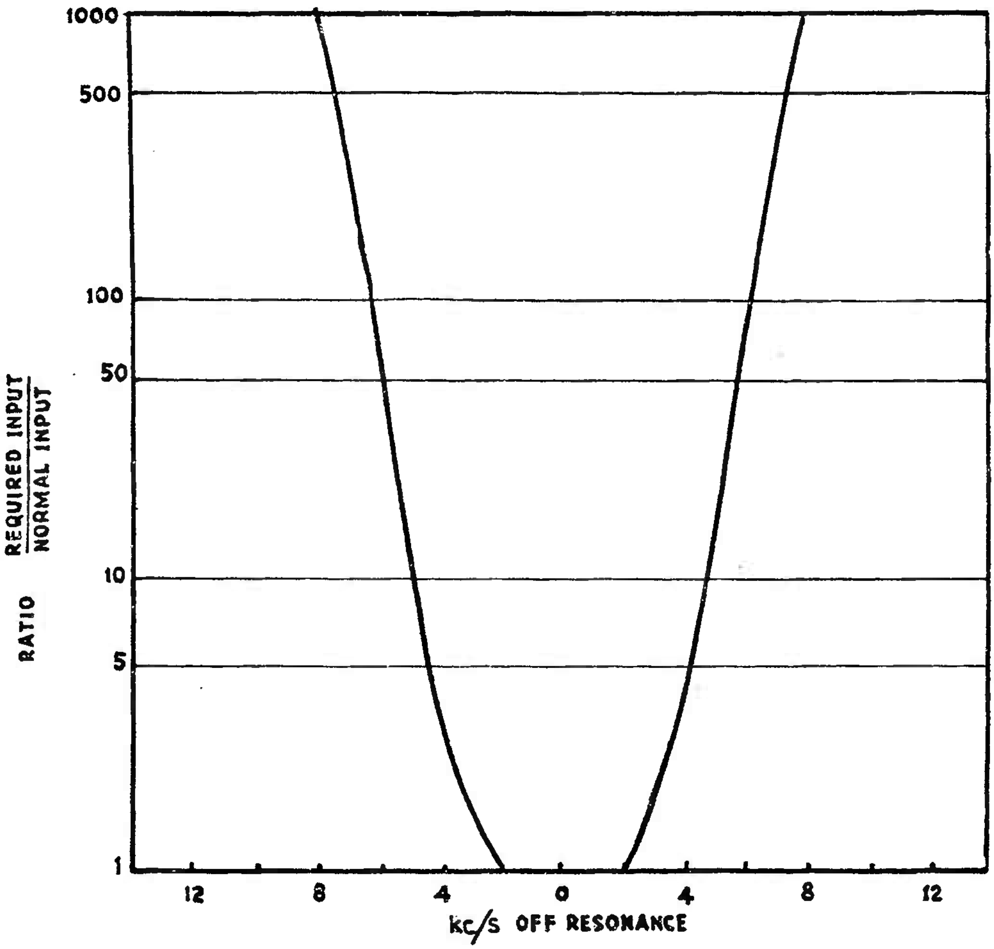

SELECTIVITY POSITIONS OF A MODERN SUPERHETERODYNE RECEIVER.

POSITION 2. NORMAL RESPONSE AND CURVE.

FIG. 24.

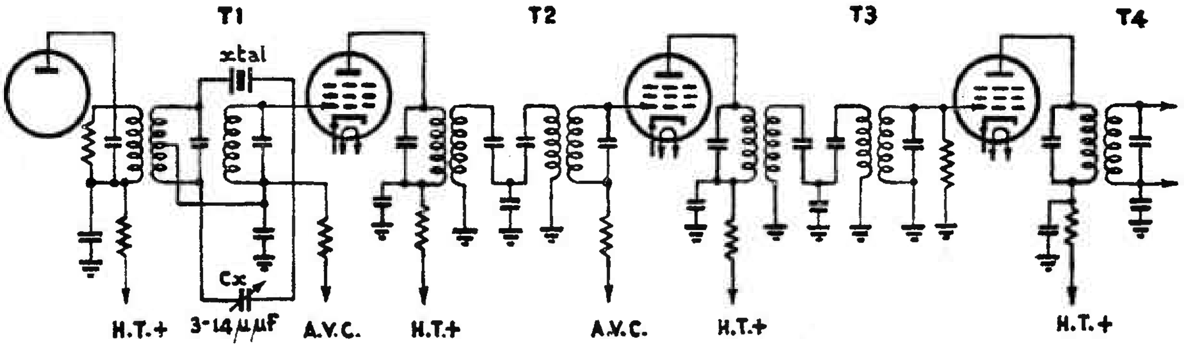

Crystal In (3 kc/s band-width at twice normal resonant input).

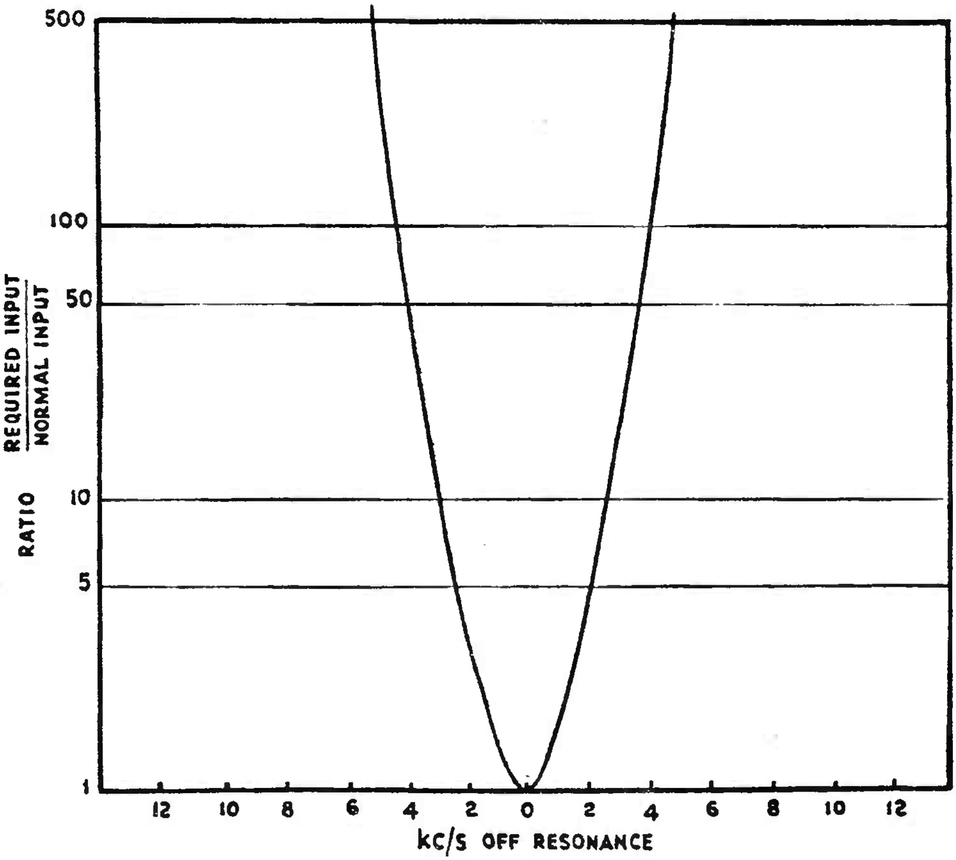

SELECTIVITY POSITIONS OF A MODERN SUPERHETERODYNE RECEIVER.

POSITION 3. MODERATELY SHARP SELECTIVITY AND CURVE.

FIG. 25.

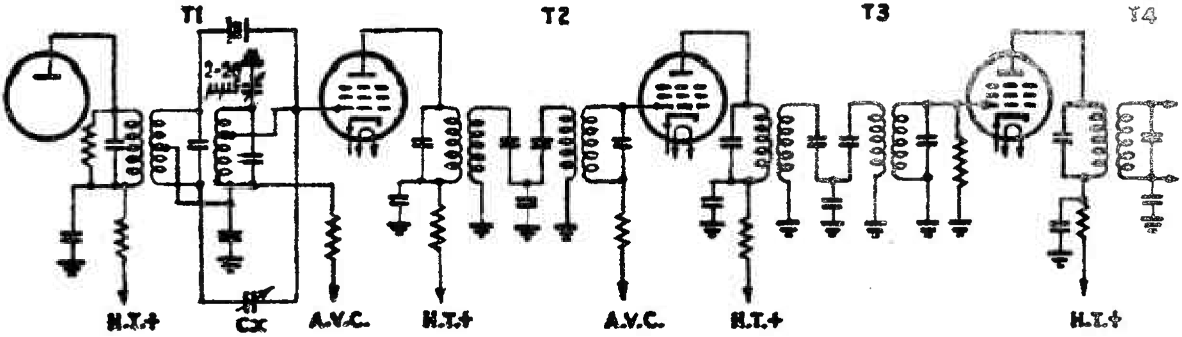

Crystal + tapping on grid coil.
(1.5 kc/s band-width at twice resonant input.)

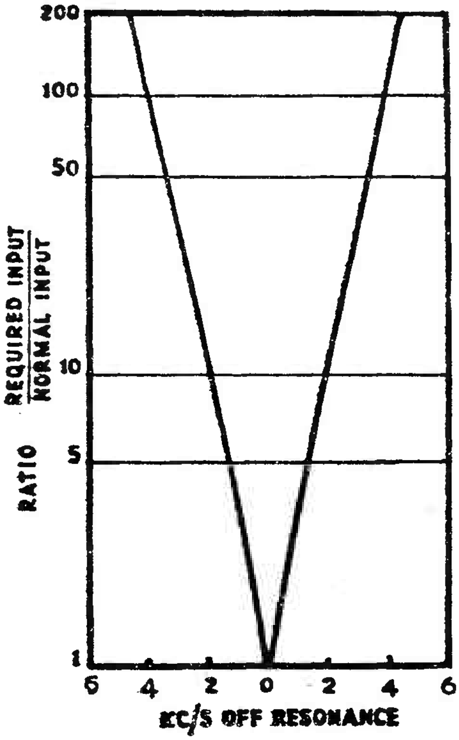

SELECTIVITY POSITIONS OF A MODERN SUPERHETERODYNE RECEIVER.

POSITION 4. CIRCUIT AND RESPONSE CURVE OF SELECTIVITY POSITION 4.

FIG. 26.

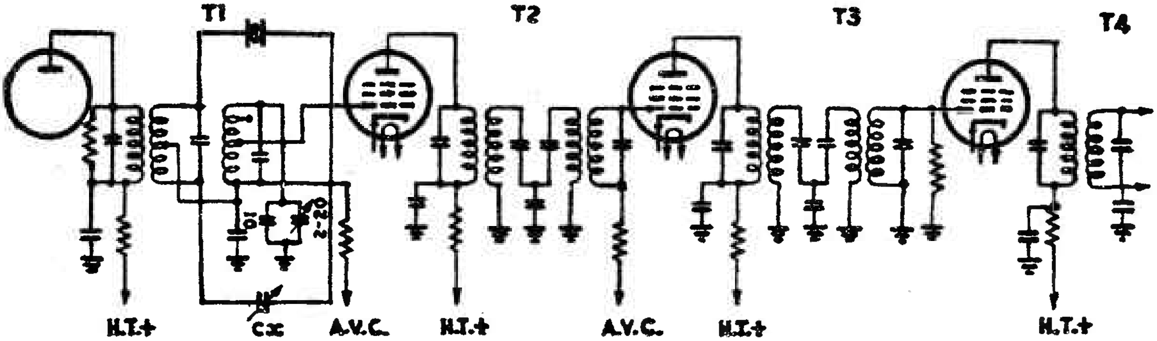

Crystal + lower tapping on grid coil.
(Band-width 400 c/s at twice resonant input.)

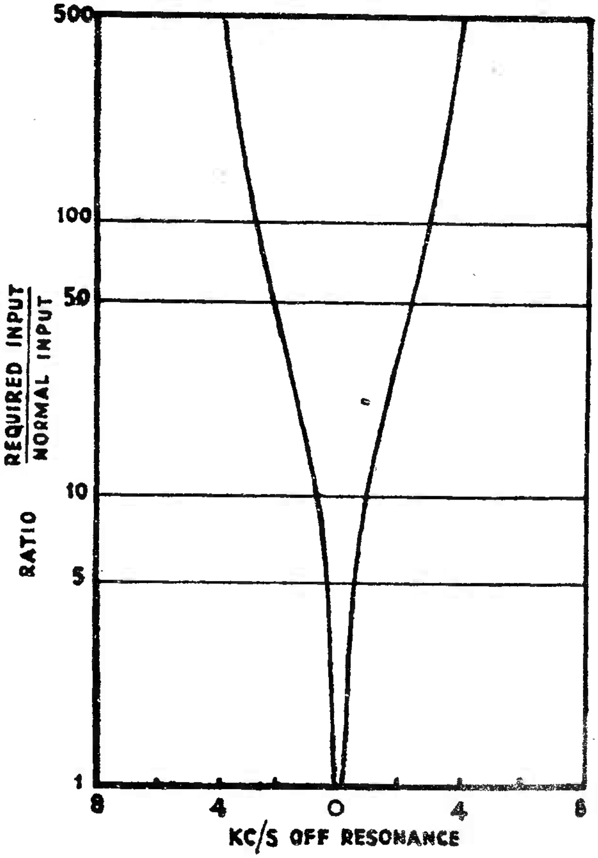

SELECTIVITY POSITIONS OF A MODERN SUPERHETERODYNE RECEIVER.

POSITION 5. CIRCUIT AND RESPONSE CURVE OF SELECTIVITY POSITION 5.

FIG. 27.

8. TEST QUESTIONS.

1. A variable condenser has a range 10-380 $\mu\mu F$. The residual capacities of the circuits may be taken as 15 $\mu\mu F$. Determine the inductances required to enable the circuit to cover the following bands - 550 kc/s-1,500 kc/s; 1,600 kc/s-4,200 kc/s.

2. Sketch a loop aerial showing its directive characteristics and explain how this directivity is achieved by this aerial. What would be the voltage delivered to the grid of the first valve from a loop aerial, given -

   number of turns - 10
   field intensity at location = 550 μV/metres
   "Q" of loop = 120
   area of loop = 1 square metre.

   assuming the loop is oriented for maximum pick-up and the signal is on a wavelength of 500 metres?

3. What are the chief functions of a radio receiver? Describe briefly three features which contribute to the popularity of the superheterodyne type of receiver design.

4. Draw a block diagram of a superheterodyne type of receiver, indicating the frequencies in the various sections when the receiver is tuned to 1,450 kc/s, the intermediate frequency being 455 kc/s and the signal being modulated firstly with a 50 c/s tone and, secondly, with a frequency of 7,750 c/s.

5. What advantages accrue from the inclusion of one or more radio frequency amplifier stages in a radio receiver? Sketch a typical stage, showing input and output circuits as well as valve connections.

6. Show by means of sketches the difference between tetrode and pentode valves. Compare the anode voltage-anode current curves for each type and refer to any advantage of the pentode over the tetrode. What is a variable-mu valve and where is it most useful in a receiver circuit?

7. Draw a sketch of a transformer coupled R.F. amplifier and its equivalent circuit. What is the approximate gain of the stage with a pentode valve?

8. What main functions is an intermediate frequency amplifier desired to perform? Sketch the frequency/amplitude characteristics of a band-pass tuned intermediate frequency stage.

9. Describe the relative merits of 175 kc/s, 455 kc/s and 1,900 kc/s as intermediate frequencies. Which would be most suitable for a receiver covering the range 6 to 30 Mc/s, and why?

END OF PAPER.

COMMONWEALTH OF AUSTRALIA.

Chief Engineer's Branch,
Postmaster-General's Department,
Treasury Gardens,
Melbourne, C.2.

COURSE OF TECHNICAL INSTRUCTION.

RADIO RECEIVING PRINCIPLES (CONTINUED).

CONTENTS:

---

1. INTRODUCTION.

1.1 The number of signal frequency amplifier stages in a receiver is generally limited, as mentioned in connection with T.R.F. receivers in Paper No. 5, unless special precautions are taken. Many advantages, particularly in short-wave reception, are obtained by converting each signal frequency to another fixed frequency and employing a high-gain amplifier at the new frequency.

The frequency change or conversion is carried out by applying the desired signal and a local oscillator voltage (often known as the heterodyne voltage) to a non-linear device, this term implying that frequencies, in addition to those supplied at the input, appear in the output voltage. Harmonics, and the sum and difference frequencies, of the signal and the local oscillator, are produced in the output circuit, and any of these components may be selected by a suitable filter. The amplitudes of the sum $(f_s + f_h)$

and difference ($f_h - f_s$) frequencies are equal, but the latter, called the intermediate frequency, is selected because possible amplification and selectivity are greater at the lower frequency. (f_s = signal frequency, and f_h = heterodyne frequency.) Any given signal can be converted to the intermediate frequency by a suitable choice of oscillator frequency. Thus, one requirement of a superheterodyne is a local oscillator so tracking with the radio frequency tuned circuits that the oscillator frequency is always separated from the signal frequency by the intermediate frequency. (This is referred to again later.)

In an ideal frequency changer the intermediate frequency amplitude varies directly with the signal frequency amplitude, and amplitude changes, due to modulation of the signal frequency, are reproduced without distortion with the intermediate frequency as the carrier. It is, of course, assumed that no attenuation of the modulation sidebands occurs in the intermediate frequency anode tuned circuit of the frequency changer.

1.2 Choice of Intermediate Frequency. The choice of intermediate frequency is first of all limited to a position in the frequency range where there is little chance of direct interference from transmitting stations.

The requirements of selectivity and second channel rejection combine to influence the choice of intermediate frequency in practical receivers. A low intermediate frequency is always helpful in obtaining good selectivity from a minimum number of circuits, but a higher frequency is useful in eliminating second channel interference, and a compromise between the two is usually made.

The tuned circuits of the radio frequency and intermediate frequency stages are usually responsible for reducing interference from adjacent channels, but there is another form of interference which can be serious. It is known as "second channel" or "image" interference. The frequency of this "image" signal is separated from the desired signal by twice the intermediate frequency, and, if we make the intermediate frequency reasonably high, the channel will be separated sufficiently far from the desired signal to be well attenuated, but the effect is very noticeable on receivers which do not employ radio frequency stages. To illustrate -

Desired Signal	1,000 kc/s
Intermediate Frequency	100 kc/s

then, assuming intermediate frequency is difference frequency, the oscillator will be tuned to 1,100 kc/s.

desired .... 1,000 kc/s)
oscillator .... 1,100 kc/s) 1,100-1,000 = 100 kc/s.
image .... 1,200 kc/s) 1,200-1,100 = 100 kc/s.

/Thus

Thus, with receiver tuned to 1,000 kc/s, a strong signal on 1,200 kc/s could cause serious interference.

Let the intermediate frequency be 450 kc/s and we have

desired.......... 1,000 kc/s
oscillator ...... 1,450 kc/s
image .... 1,900 kc/s

in which case image is 700 kc/s farther away and attenuation should be high.

1.3 Oscillator Frequency. It was shown above that there are two signal frequencies which react with a given oscillator frequency to produce the intermediate frequency, and, conversely, there are two oscillator frequencies which can give the intermediate frequency with a certain signal frequency. The two oscillator frequencies are higher and lower than the signal frequency by an amount equal to the intermediate frequency. The higher oscillator frequency is almost invariably chosen because the ratio of its maximum to minimum over a given range is less than that of the signal. This means that the ratio of the maximum to the minimum values of oscillator tuning capacitor is less than that of the signal tuning capacitor. For example, a receiver having a range from 550 to 1,500 kc/s calls for a tuning capacitor ratio change of 7.43 : 1.

$$\text{that is, capacity range is proportional to } \frac{1}{f^2}$$

$$\text{therefore capacity range} = \frac{1}{\left(\frac{550}{1500}\right)^2} \text{ or } 7.43 : 1$$

When the oscillator frequency is higher than the signal frequency, then the oscillator range for an intermediate frequency of 465 kc/s is 1,015-1,965 kc/s, which requires a capacity ratio range of 3.75 : 1.

When the oscillator frequency is lower than the signal frequency, then for the same intermediate frequency its frequency range would be 85-1035 kc/s, requiring a tuning capacitor ratio of 148.3 : 1.

Thus, from the point of view of ganging and construction, the use of the higher oscillator frequency offers less difficulty in manufacture. It is usual to use the same size tuning capacitor unit for the oscillator as for the radio frequency circuits and to adjust its range by series and parallel padding capacitances.

/COMMUNICATION

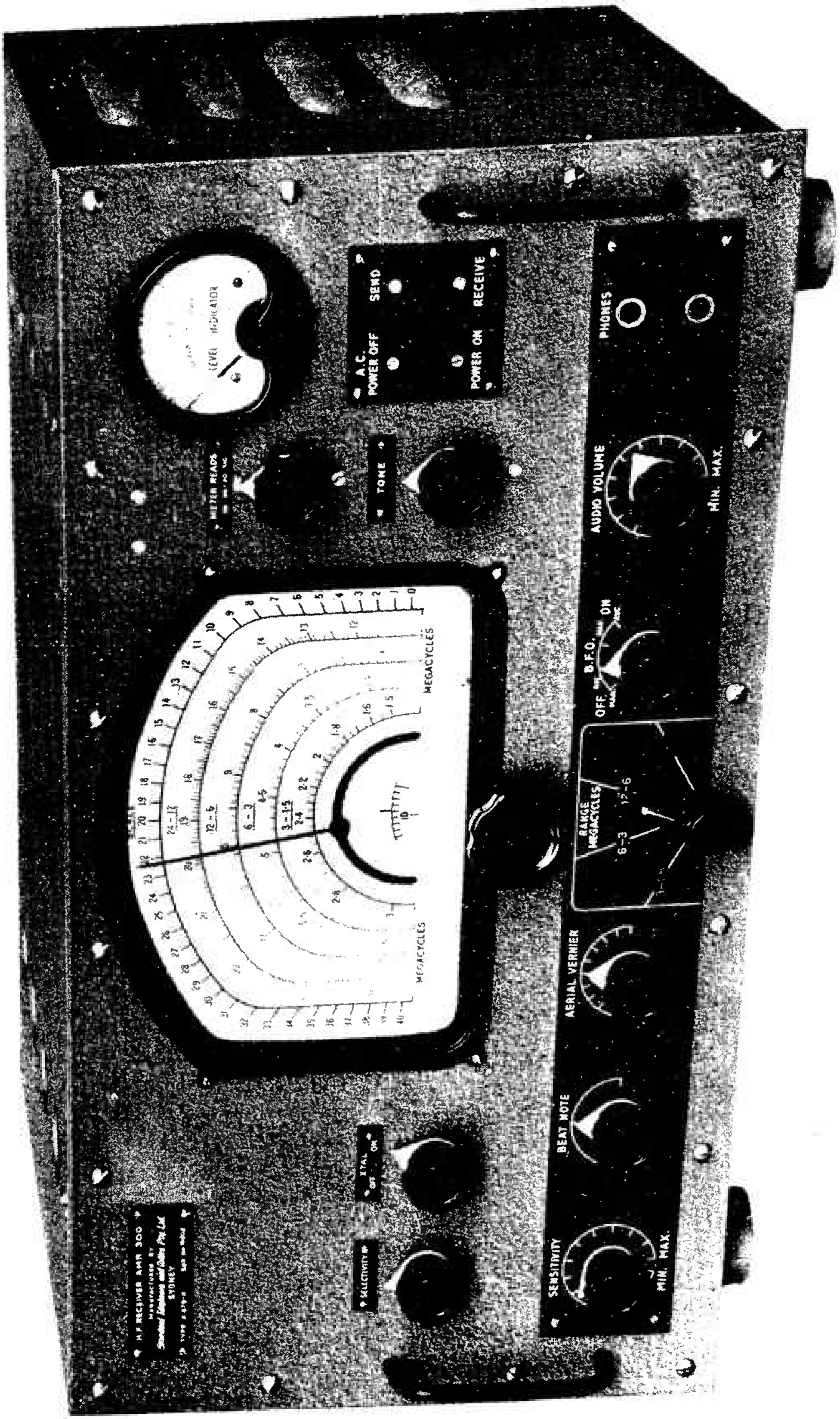

COMMUNICATION TYPE RADIO RECEIVER (STC TYPE AMR300).

2. FREQUENCY CHANGER CIRCUITS.

2.1 Frequency changer circuits may be conveniently divided as follows -

(i) Circuits where the signal and oscillator frequencies are applied to a common electrode. (Also known as heterodyne mixing.)

(ii) Circuits where the two frequencies are applied to different electrodes.

(iii) Improved application of the above.

(iv) Triode-hexode circuits.

There is no fundamental difference between the circuits, and frequency changing results because the oscillator voltage controls the mutual conductance and, hence, the amplification of the valve.

2.2 Heterodyne Mixing. (Signal and Oscillator frequencies applied to a common electrode.) The carrier frequency of a signal can be changed by superposing a local oscillation and rectifying the resultant wave. If the valve were operated as a linear amplifier, the two frequencies (input and local oscillator) would continue to have a separate existence in the anode circuit, whereas the generation of several frequencies in the anode circuit is required.

By mixing the two frequencies and subjecting these to rectification, a number of frequencies are generated in the anode circuit including the sum and difference of the signal and oscillator frequencies respectively. The desired frequency may be selected by tuning the output. Any modulation present on the signal frequency is also present on the output frequency.

It is usual to operate the valve as an anode bend detector and frequently as a square law detector (that is, rectified output proportional to square of input volts).

Fig. 1a shows a tetrode acting as a frequency changer of this type using the cathode as the common electrode. The valve is operated as an anode bend detector, giving rise to the usual high frequency terms in the anode circuit, including the required difference frequency. L_1, L_2 and C_1 constitute the oscillator circuit, coil L_1 being common to both the signal circuit and the oscillator circuit. Fig. 1b shows an improved version of this, using a separate oscillator valve.

/Fig. 1.

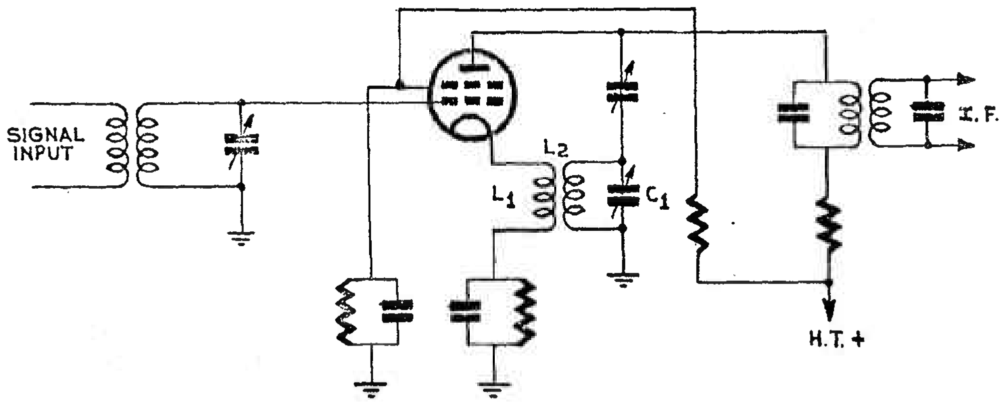

(a) Tetrode Converter.

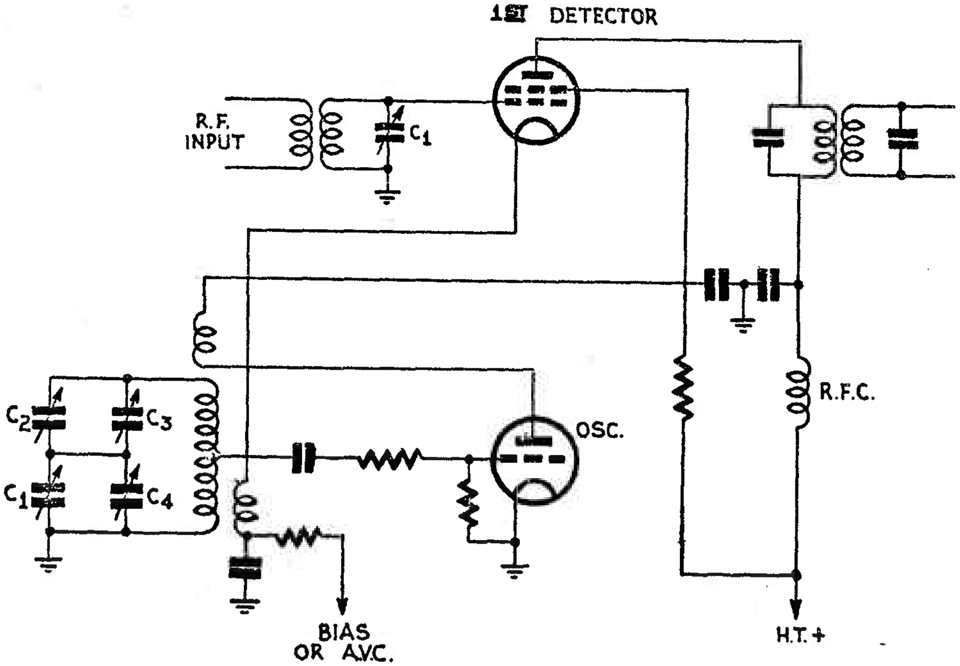

C_1 GANGED TUNING CONDENSER
C_2, C_3, C_4 PADDING AND TRACKING CONDENSER

(b) Using Tetrode Detector and Triode Oscillator.

FIG. 1. FREQUENCY CHANGERS.

Fig. 2 shows a triode-pentode functioning as a converter under similar conditions to Fig. 1, the cathode again being the common electrode. In this circuit, the triode portion functions as a separate oscillator, the pentode operating as a square-law anode bend detector. This circui has some advantages over the tetrode in that the oscillator is separate; this gives better performance at high-frequencies. Other electrodes, such as the screen grid and suppressor grid, may be used as the common electrode, but the conversion gain is not very high in either case and other factors also render the use of the screen grid unsatisfactory.

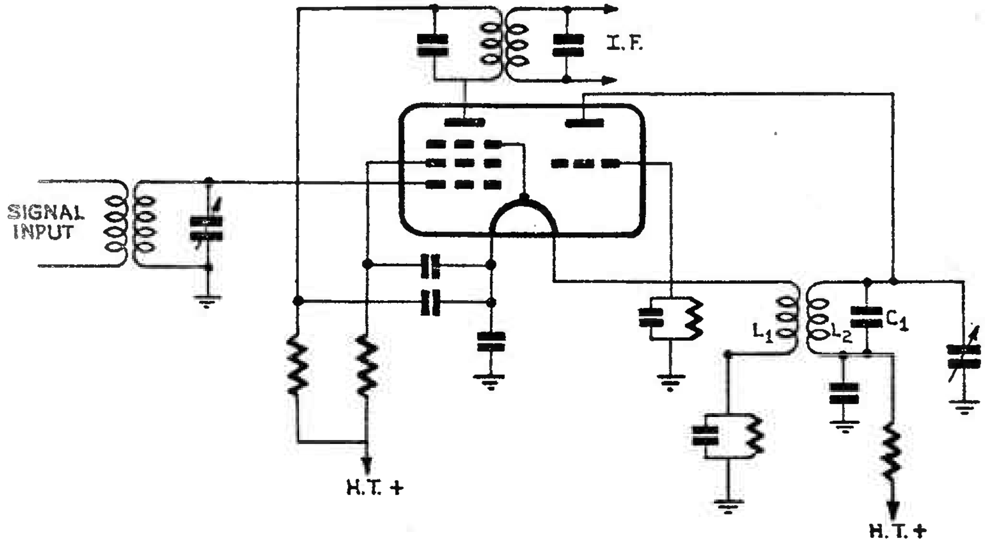

FIG. 2. TRIODE-PENTODE HETERODYNE CONVERTER.

Disadvantages. The main disadvantages of the above are -

(i) "Pulling" of oscillator circuit by signal frequency.
(ii) Mixing adversely affected.
(iii) Amplification irregular.

(i) Pulling. The common electrode anode detector type of mixer has the disadvantage of introducing coupling between the local oscillator and the circuit tuned to the incoming signal. The result of this coupling is that tuning the input circuit has an appreciable effect on the oscillator frequency. At the frequencies employed in short-wave transmission this seriously affects the operation of the receiver, although broadcast band operation is satisfactory.

/(ii)

(ii) For convenience of ganging, the oscillator frequency is higher than the signal frequency. Under this condition, the interaction produced by the inter-electrode coupling of (i) is in opposition to that produced electronically so that, as the frequency rises, the effectiveness of the tube as a mixer is seriously reduced.

2.3 Electronic Mixing. (Signals applied to different electrodes.) The disadvantages referred to above led to the introduction of "electronic mixing." In this, the incoming signal is made to modulate the local oscillation, and the anode current is proportional to the product of the two component frequencies. The sum and difference frequencies are present in the anode current, and the required one may be selected by tuning as before. In this case, it is not necessary to have any rectification present since the process is in effect "MODULATION," thus the valve is enabled to operate under more efficient conditions.

A number of circuits has been developed for use with this method of frequency conversion, the circuits mainly differing as regards the requirements of the valve with which they are associated. Several of these will be illustrated as a matter of interest, and will show why the designs are continually changing.

Fig. 3a shows a "pentagrid mixer" such as the 6L7, and Fig. 3b the associated circuit. Fig. 3c shows another application of the pentagrid without a separate oscillator valve. The arrangement of the grids of the valve completely isolates the local oscillator and signal frequency circuits by utilising the local oscillator to suppressor grid to modulate the amplified signal frequency currents. The five grids function as follows -

G1	Inner grid. Ordinary control grid supplied with input signal.
G2 G4	Function as a screen grid.
G3	Biassed negatively and has local oscillator signal applied.
G5	Functions as the normal suppressor grid.

In operation, G1 controls the space current drawn from the cathode in accordance with the signal voltage, and the oscillator action on G1 serves as a switch which allows these electrons to pass on to the anode or causes them to be returned to the screen region, according to whether the oscillator voltage is positive or negative, respectively. The result is equivalent to modulating the oscillator voltage upon the signal frequency, with the result that a difference frequency (sideband) is developed in the anode circuit.

/Fig. 3.

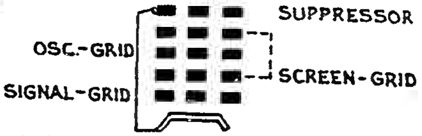

(a) Valve Construction.

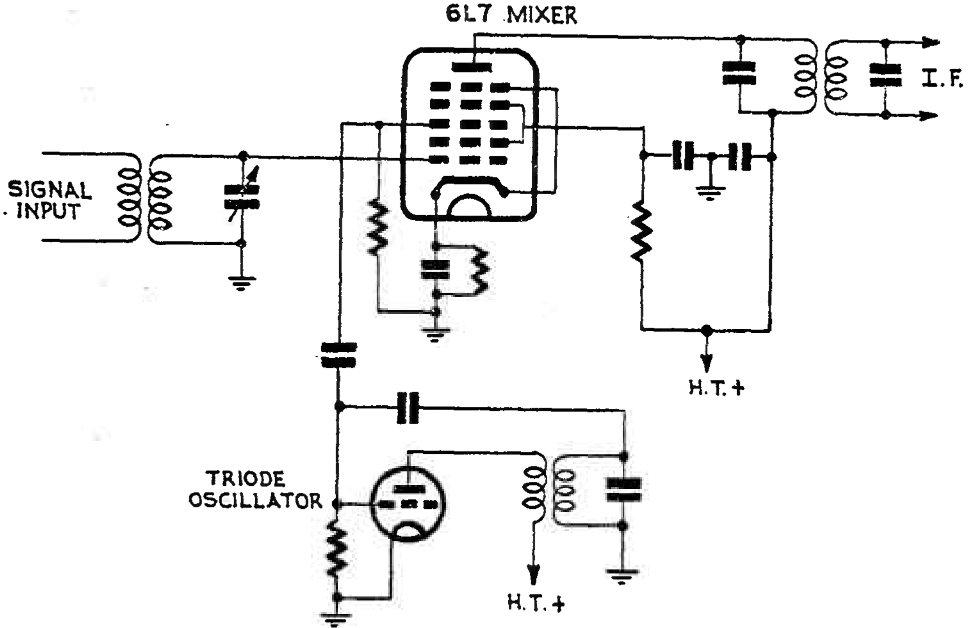

(b) Pentagrid Mixer Circuit.

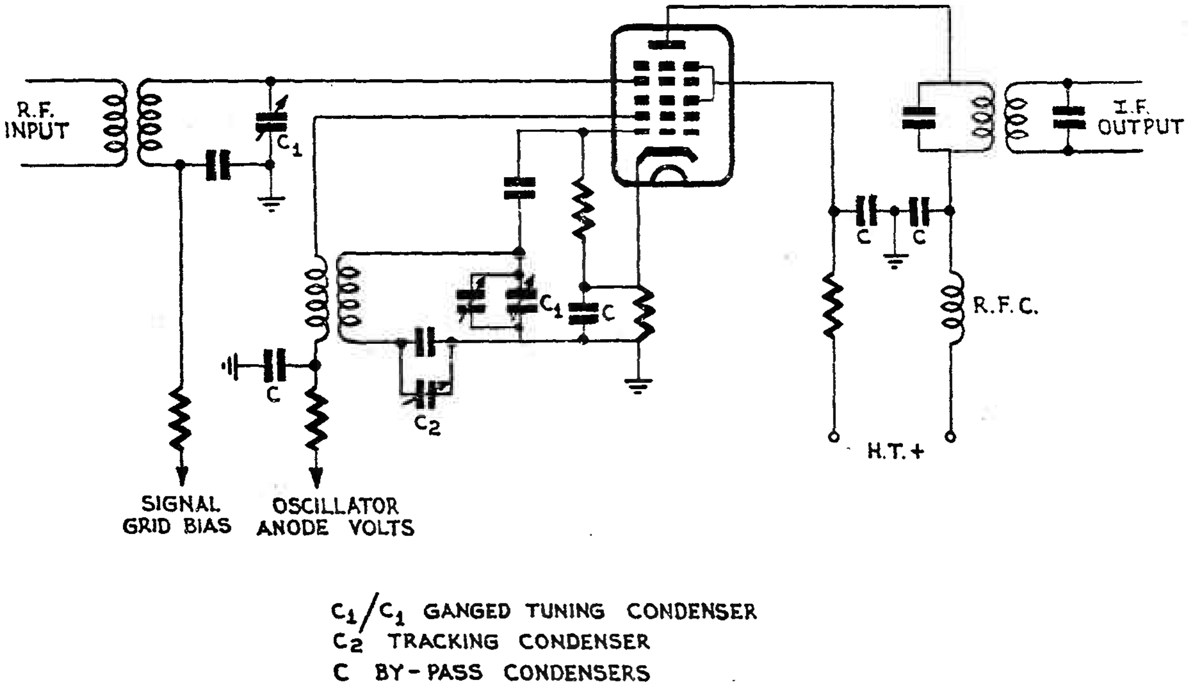

(c) Pentagrid Converter Without Separate Oscillator Valve.

FIG. 3. PENTAGRID MIXER CIRCUIT.

Advantage - Very low interaction between local oscillator and signal circuits.

Disadvantages - Requires separate oscillator.

2.4 Improved Electronic Mixing. An improvement on the pentagrid mixer was the pentagrid-converter or "heptode" which is a combined oscillator and frequency changer. It contains four normal grids and one consisting merely of two rods similar to grid support wires. These two rods constitute the anode of the oscillator, the grid (G1) of which is nearest the cathode. Fig. 4a illustrates a valve of this type (6A8G) and Fig. 4b a typical circuit.

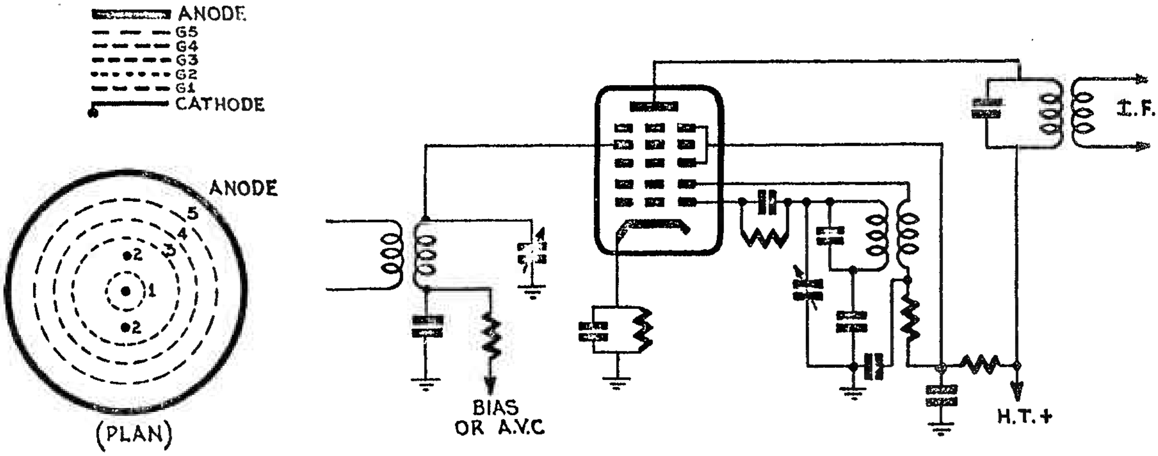

(a) Heptode Valve (6A8G)

(b) Circuit.

FIG. 4. HEPTODE FREQUENCY CHANGER.

The grids of the valve function as -

G1 local oscillator control grid.

G2 local oscillator anode.

G3)
G5) screen grids.

G4 negatively biased signal input control grid.

Electrons emitted from cathode are controlled in their flow towards the oscillator anode by the grid G1. A portion of the stream passes to the oscillator anode, and the remainder passes on through the first screen grid to the signal grid G4 where it is further modulated by the input signal and thence passes to anode. The process is modulation, and the output current contains a difference frequency as before.

/It

It is sometimes considered that the valve has two space charges -

(i) usual space charge near cathode;

(ii) oscillating supply of electrons constituting a "virtual cathode" in the neighbourhood of grid G4.

If a 6A8G or similar valve is used in Fig. 4b, the following disadvantages are apparent -

(i) oscillator transconductance low, causing serious loss at high frequencies.

(ii) oscillator frequency will change with signal grid bias variation.

(iii) coupling between G4 and virtual cathode causes oscillator frequency currents to flow through signal frequency circuits associated with G4. This leads to lowered conversion efficiency, overloading signal grid, etc.

The most important defect, (ii) above, can be eliminated by a modification of the design as exemplified by the 6SA7, which has two "collector plates" mounted at the side rods of G2 which prevent electrons returned by G4 from reaching the cathode region. Fig. 5a illustrates this point. Fig. 5b is a typical circuit for a 6SA7. A separate oscillator will improve performance at high frequencies.

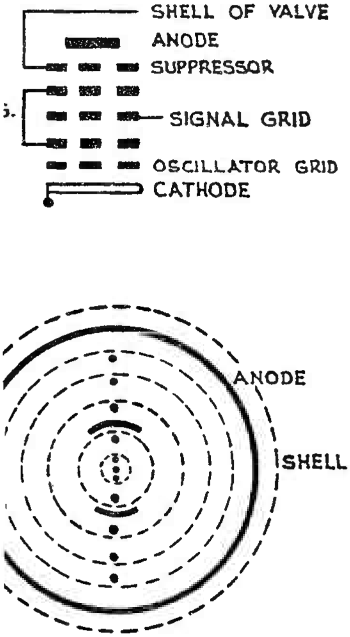

nproved Heptode Valve (6SA7).

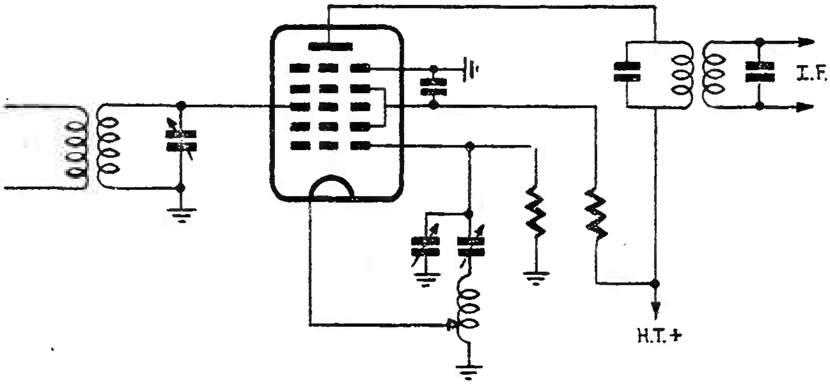

(b) Typical Circuit.

FIG. 5. IMPROVED HEPTODE FREQUENCY CHANGER.

It will be noticed in Figs. 3, 4 and 5 that the oscillator voltage is introduced on grids nearer the cathode than the signal voltage grid.

Since the grid closest to the cathode has the greatest effect on the anode current, the oscillator grid variation receives full amplification of valve, whereas the signal grid is subject to a much smaller amplification. This is the wrong way round, since the received signal is the weaker. To improve performance in this regard, the triode-hexode valve was developed.

2.5 Electronic Mixing with Triode-Hexode Valves.

The electrode arrangement of a triode-hexode mixer, together with a typical circuit arrangement, is shown in Fig. 6. Here G1 and the anode A1 are on one side of a flat cathode and function in a triode oscillator circuit. On the other side of the same cathode there is an extension of the oscillator grid G1, followed by a screen grid G2 which surrounds a signal grid G3 with a minor (or second) anode A2. This side of the valve operates in much the same manner as a pentagrid converter, with the exception that the incoming signal is amplified before modulation. Among the advantages offered by a triode-hexode are -

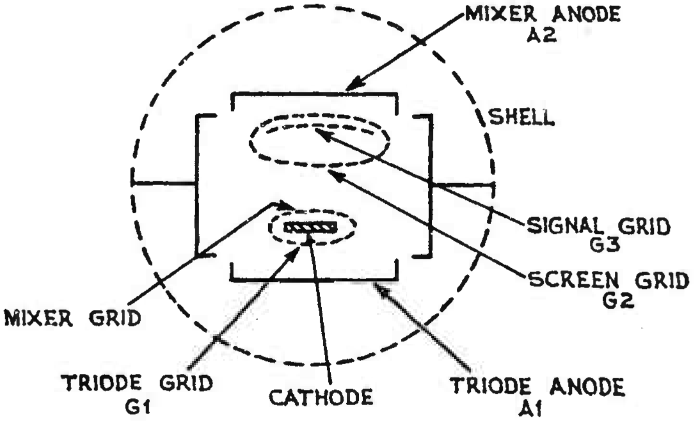

(a) Triode-Hexode Valve.

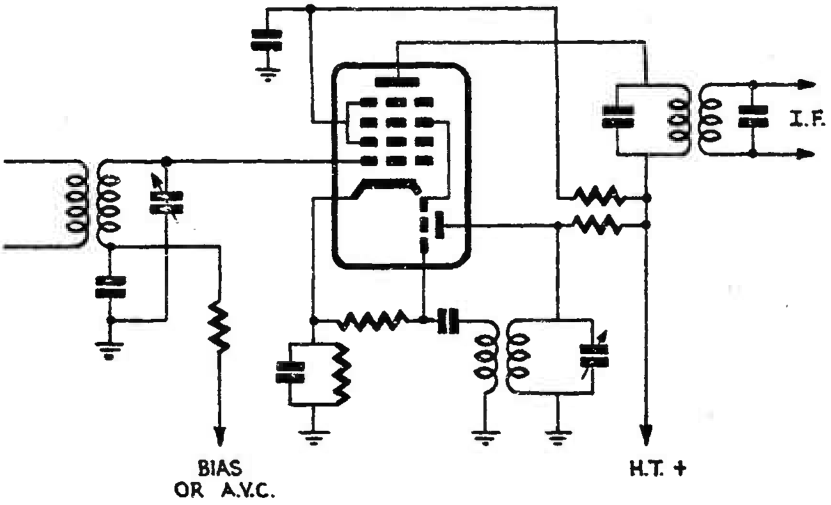

(b) Circuit.

FIG. 6. TRIODE-HEXODE CONVERTER.

/(i)

(i) Oscillator can be designed for higher transconductance.

(ii) Improved signal-to-noise ratio resulting from the amplification of incoming signal before modulation.

(iii) The internal shield S eliminates all interaction between the oscillator and triode sections.

2.6 The advantages of Electronic Mixing over Heterodyne Mixing may be summed up as follows -

(i) Simplification of circuit design.

(ii) Elimination of coupling between signal and oscillator circuits.

(iii) Oscillator frequency and action generally more stable.

(iv) Radiation of energy at heterodyne frequency decreased.

(v) Conversion conductance higher.

(vi) Oscillator transconductance higher.

2.7 Noise. The converter valve produces noise voltages in its output as a result of random fluctuations in the space current of the valve, and random variations in the way the space current divides between the anode and other electrodes. The basic expression for valve noise contains a factor I_a/g^2 where

I_a = anode current
g = mutual conductance or conversion conductance.

In most converters the conversion conductance is appreciably less than that of a similar pentode, and, as this factor becomes smaller, the valve noise increases. However, a stage or two of radio frequency amplification ahead of the converter minimises this effect, as was mentioned earlier.

Signal/Noise Ratio. This is the ratio of the signal voltage to the noise voltage at the converter grid, and is affected by the valve type, its method of operation and the number of preceding tuned circuits. In general, it is found that the converter valve noise is higher than that of the radio frequency amplifier. If the converter is preceded by one or two stages of radio frequency amplification, the converter noise is effectively reduced provided there is reasonable gain in the radio frequency amplifier. It is convenient for comparison to reduce the converter noise to equivalent noise on the first radio frequency grid.

/Example

Example -

Noise on converter grid $= 4\ \mu V$
Noise on R.F. amplifier $= 1\ \mu V$
R.F. stage gain $= 20$
Total noise on R.F. grid $= \sqrt{1^2 + (4/20)^2} = 1.02\ \mu V$
If R.F. stage gain $= 4$
then total noise $= \sqrt{1^2 + (4/4)^2} = 1.414\ \mu V$

So one advantage of the use of radio frequency gain is apparent.

2.8 Conversion Conductance and Gain. A new term has arisen with the use of frequency changer valves, and is used to define their efficiency in receiving a signal input at one frequency and delivering an output at another frequency (intermediate frequency). This is the change in anode current at the intermediate frequency or beat frequency divided by the change in grid voltage at signal frequency and is known as "conversion conductance." It is expressed as "milliamperes per volt" similar to mutual conductance.

A knowledge of the conversion conductance makes it possible to compute the amplification produced by a converter, it is, approximately -

$$\text{Amplification} = g_c Z$$

where g_c = conversion conductance, and
Z = output circuit impedance.

More accurately

$$\text{Gain} = \frac{g_c\, r_a\, R_L}{r_a + R_L}$$

where g_c = conversion conductance,

r_a = anode resistance, and

R_L = dynamic resistance of tuned circuit at resonance.

When coupled circuits are used, R_L should be the coupled impedance.

2.9 Interference Whistle Production.

(i) Interference whistles may be produced in a frequency changer whenever the signal circuit contains undesired frequencies which can combine among themselves, with the oscillator or with its harmonics to produce a frequency near to the intermediate frequency. The former possibility is remote and need not be considered. Oscillator interference whistles, except that due to the image

/signal

signal, against which even an ideal frequency changer cannot discriminate, are due mainly to distortion in the frequency changer. Harmonic distortion in the oscillator valve is rarely serious. A large number of whistles may be produced by various oscillator harmonic and signal combinations, interference being audible so long as the beat note is within the audio frequency range. For example, consider an intermediate frequency of 465 kc/s and a desired signal of 700 kc/s; the oscillator frequency is then 700 + 465 = 1,165 kc/s. Undesired frequencies of 351, 816, 1,867 and 2,797 kc/s present at the grid of the frequency changer produce whistles of about 2 kc/s pitch.

$$351\ (f_{osc} - 2f_{sig}) = 1{,}165 - 2 \times 351 = 1{,}165 - 702 = 463 \text{ kc/s.}$$
$$816\ (2f_{sig} - f_{osc}) = 1{,}632 - 1{,}165 = 467 \text{ kc/s.}$$
$$1{,}867\ (2f_{osc} - f_{sig}) = 2{,}330 - 1{,}867 = 463 \text{ kc/s.}$$
$$2{,}797\ (f_{sig} - 2f_{osc}) = 2{,}797 - 2{,}330 = 467 \text{ kc/s.}$$

This illustration shows that the whistle interference problem is somewhat complex.

(ii) Interference Due to Combination of Different Harmonics of the Signal and Oscillator. Oscillator and signal harmonic interference whistles are spread over the tuning range in an irregular manner. Trouble due to oscillator harmonic interference, by making the oscillator amplitude as small as possible, is consistent with good conversion conductance.

(iii) Interference Due to Combination of Equal Harmonics of the Signal and Oscillator. The characteristic of this type is that the whistles are grouped around the oscillator frequency. For example, with an intermediate frequency of 465 kc/s and a desired signal of 700 kc/s with the oscillator 1,165 kc/s, possible interfering frequencies are -

$$932 \text{ kc/s, that is, } 2(f_{osc}-f_{sig}) = 2(1{,}165-932) = 2 \times 233 = 466 \text{ kc/s.}$$
$$1{,}009 \text{ kc/s, that is, } 3(f_{osc}-f_{sig}) = 3(1{,}165-1{,}009) = 3 \times 156 = 468 \text{ kc/s.}$$
$$1{,}049 \text{ kc/s, that is, } 4(f_{osc}-f_{sig}) = 4(1{,}165-1{,}049) = 4 \times 116 = 464 \text{ kc/s.}$$
$$1{,}398 \text{ kc/s, that is, } 2(f_{sig}-f_{osc}) = 2(1{,}398-1{,}165) = 2 \times 233 = 466 \text{ kc/s.}$$
$$1{,}321 \text{ kc/s, that is, } 3(f_{sig}-f_{osc}) = 3(1{,}321-1{,}165) = 3 \times 156 = 468 \text{ kc/s.}$$
$$1{,}281 \text{ kc/s, that is, } 4(f_{sig}-f_{osc}) = 4(1{,}281-1{,}165) = 4 \times 116 = 464 \text{ kc/s.}$$

(iv) Intermediate Frequency Harmonics. Harmonics of the intermediate frequency may cause interference if there is feedback from the intermediate frequency amplifier to the signal circuits when the latter are tuned. The usual cause of feedback is inadequate filtering of the A.V.C. bias, but it may also occur due to insufficient coupling of radio frequency,

/converter

converter and intermediate frequency stages, and to poor radio frequency filtering between detector and first audio amplifier.

(v) Interference Charts. A convenient method of expressing interference frequencies is in the form of charts, one type of which is shown in Fig. 7 for an intermediate frequency of 465 kc/s.

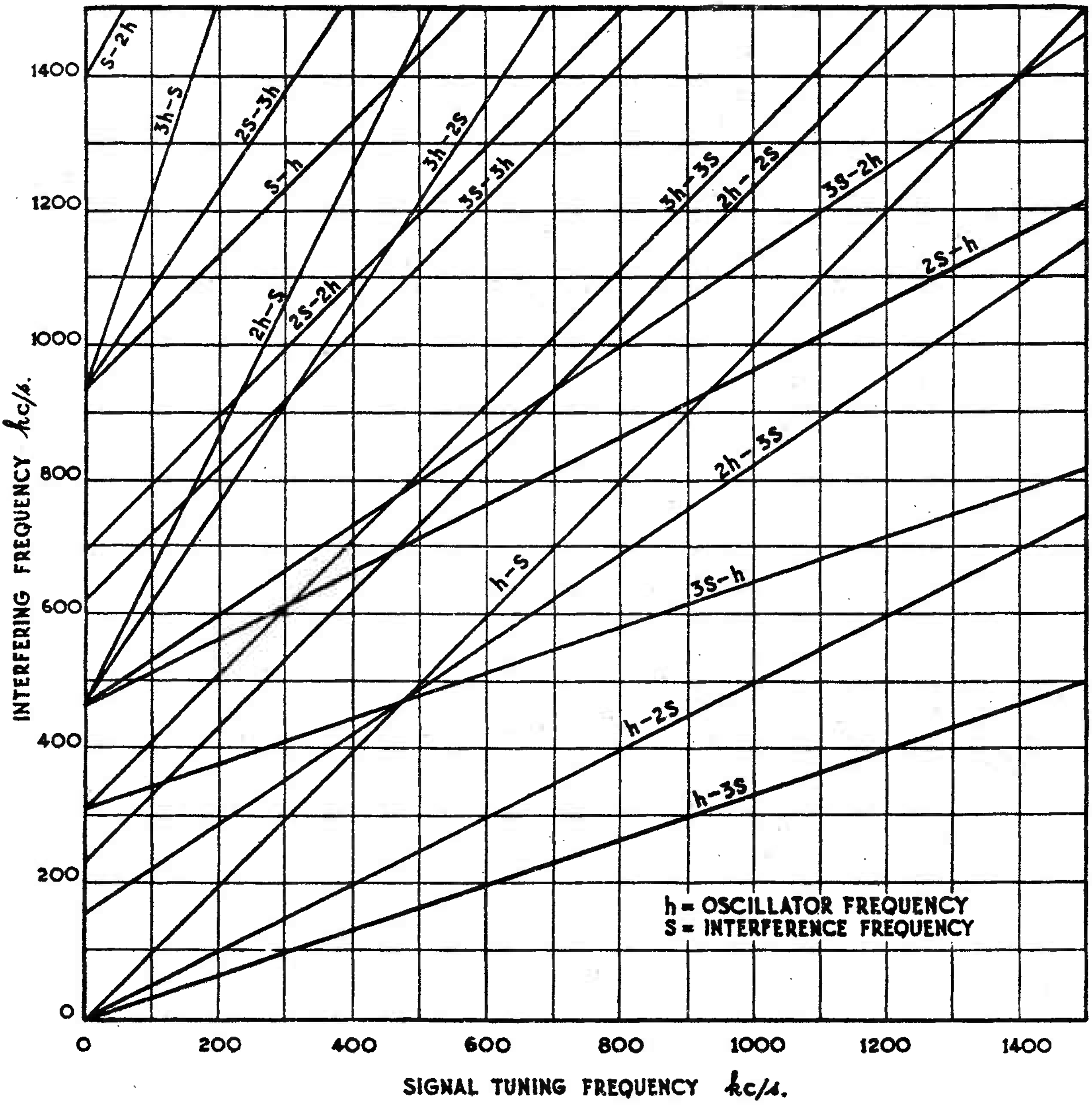

INTERFERENCE CHART.

Intermediate Frequency = 465 kc/s.

FIG. 7.

Example on use of chart - consider a desired frequency of 1,000 kc/s. By drawing a vertical line from 1,000 kc/s on the horizontal axis, we find eight intersections with the interference lines from 333.3 kc/s to 1,310 kc/s. If any of these undesired frequencies is present in the input to the frequency changer, a whistle may be produced. Let us examine these eight frequencies and find their relationship and resultant frequencies. (f_h = 1,000 + 465 = 1,465 kc/s.)

f_s = interfering signal kc/s.	Relationship.	Resultant Frequency.
333.3	$f_h - 3f_s$ 1,465 - 1,000	465 kc/s.
500	$f_h - 2f_s$ 1,465 - 1,000	465 kc/s.
643.3	$3f_s - f_h$ 1,930 - 1,465	465 kc/s.
821.7	$2f_h - 3f_s$ 2,930 - 2,465	465 kc/s.
965	$2f_s - f_h$ 1,930 - 1,465	465 kc/s.
1,131.7	$3f_s - 2f_h$ 3,395 - 2,930	465 kc/s.
1,232.5	$2f_h - 2f_s$ 2,930 - 2,465	465 kc/s.
1,310	$3f_h - 3f_s$ 4,395 - 3,930	465 kc/s.

where f_h = oscillator frequency, and
f_s = interference signal frequency.

It is also apparent that if the interfering signals were ± several kc/s, they would still give an interfering whistle in the receiver.

Example 2 - If there is a strong local station on 1,000 kc/s, its interference possibilities may be estimated by drawing a line from 1,000 kc/s on the vertical ordinate (interfering signal). The points of intersection with the interference lines give the tuning points (on horizontal scale) at which interference due to the local station may be expected. In this case there are 12, made up as follows -

/Interference

Interference Line.	Approximate value from hor. scale kc/s.	f_h for approx. value from hor. scale kc/s.	Valuation	Resultant Frequency kc/s.	Whistle Frequency kc/s.
3h - s	20	485	3 × 485 - 1,000	455	10
2s - 3h	46	511	2,000 - 3 × 511	467	2
s - h	70	535	1,000 - 535	465	0
2h - s	266	731	1,462 - 1,000	462	3
2s - 2h	305	770	2,000 - 1,540	460	5
3h - 2s	358	823	2,469 - 2,000	469	4
3s - 3h	383	848	3,000 - 2,544	456	9
3h - 3s	690	1,155	3,465 - 3,000	465	0
2h - 2s	770	1,235	2,470 - 2,000	470	5
3s - 2h	800	1,265	3,000 - 2,530	470	5
2s - h	1,075	1,540	2,000 - 1,540	460	5
2h - 3s	1,265	1,730	3,460	460	5

NOTE: In above table s = interfering signal = 1,000 kc/s.

Considering the table -

(i) The first column is the interference line intersected.

(ii) The second column is the approximate frequency as read from bottom scale.

(iii) The third column is the oscillator frequency for (ii).

(iv) The fourth column is (i) in numerical form.

(v) The fifth column is the resultant interference frequency.

(vi) The sixth column is the whistle frequency.

It is evident from the sixth column that this whistle frequency could be anywhere between 465 kc/s ± about 10 kc/s, so that the frequency read in column 2 could vary from the value shown and still cause interference.

This explanation may seem somewhat detailed, but it may help to provide a clue to some of the whistles heard in a superheterodyne receiver.

/2.10

2.10 Desirable Properties of a Frequency-Changer Valve.

(i) A low value of anode and total current and a high slope or A.C. resistance. This characteristic, in conjunction with conversion gain, has an influence on noise due to shot effect (see later) and thus on the signal/noise ratio of the converter stage.

(ii) A high value of conversion conductance, which is maintained in the high-frequency ranges. High conversion conductance gives high signal-to-noise ratio, but tends to produce high harmonic response and a compromise of about 85% of the maximum value possible.

(iii) Low oscillator harmonic response. Oscillator operation should be limited to the straight portion of the oscillator voltage/conversion conductance curve.

(iv) Minimum cross-modulation. Cross-modulation is reduced by high radio frequency selectivity before the frequency changer. Signal harmonic response is also reduced by this.

(v) Minimum coupling between oscillator and signal circuits. In an ideal frequency changer, variation in signal circuit tuning should have no effect on oscillator frequency or amplitude. Coupling by inter-electrode capacitance and the common electron stream occurs in practice, and the signal circuit tuning always has some influence.

(vi) Minimum variation of signal grid-cathode capacitance for bias variations on the signal grid (to enable use of A.V.C.). A capacitance variation of about 2μμF occurs when the signal grid bias is varied, and is due to variation of the distance between the grid and virtual cathode produced by the space charge. This effect is most pronounced at the high-frequency end of any given range because the signal tuning capacitance is usually small there.

(vii) Low signal grid input admittance.

(viii) Small oscillator frequency drift.

(ix) Minimum microphone effects.

/3.

3. OSCILLATORS.

3.1 The general principles and applications of oscillators were discussed in Radio I, Paper No. 8, and this is an amplification of those remarks as applicable particularly to superheterodyne receivers.

Any of the oscillator circuits, except crystal circuits, which are referred to in the Paper dealing with transmitters, are suitable. Three useful circuits are reproduced here for interest in Fig. 8. The electron coupled oscillator is used frequently because of its frequency stability.

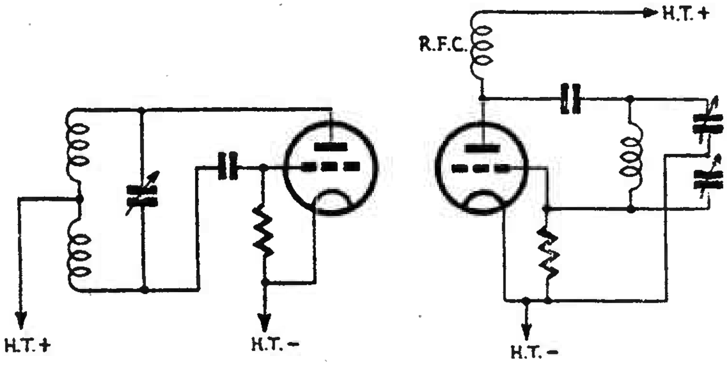

(a) Hartley. (b) Colpitts.

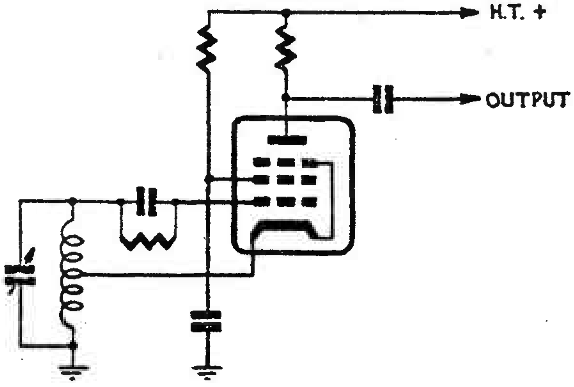

(c) Electron-Coupled Oscillator.

TYPICAL OSCILLATOR CIRCUITS FOR SUPERHETERODYNE RECEIVERS.

FIG. 8.

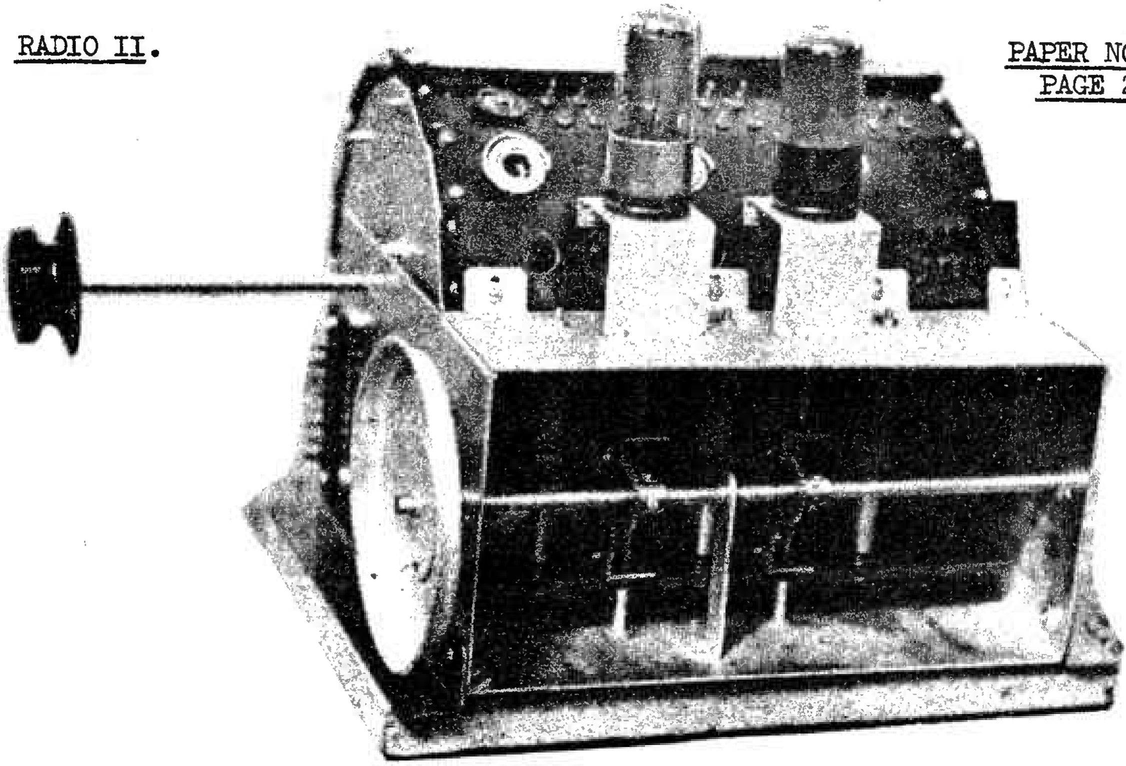

(a) New Type of Ferro-Tuned Unit. R.F., Aerial and Oscillator Tuning.
5 bands 550 kc/s-28 Mc/s.

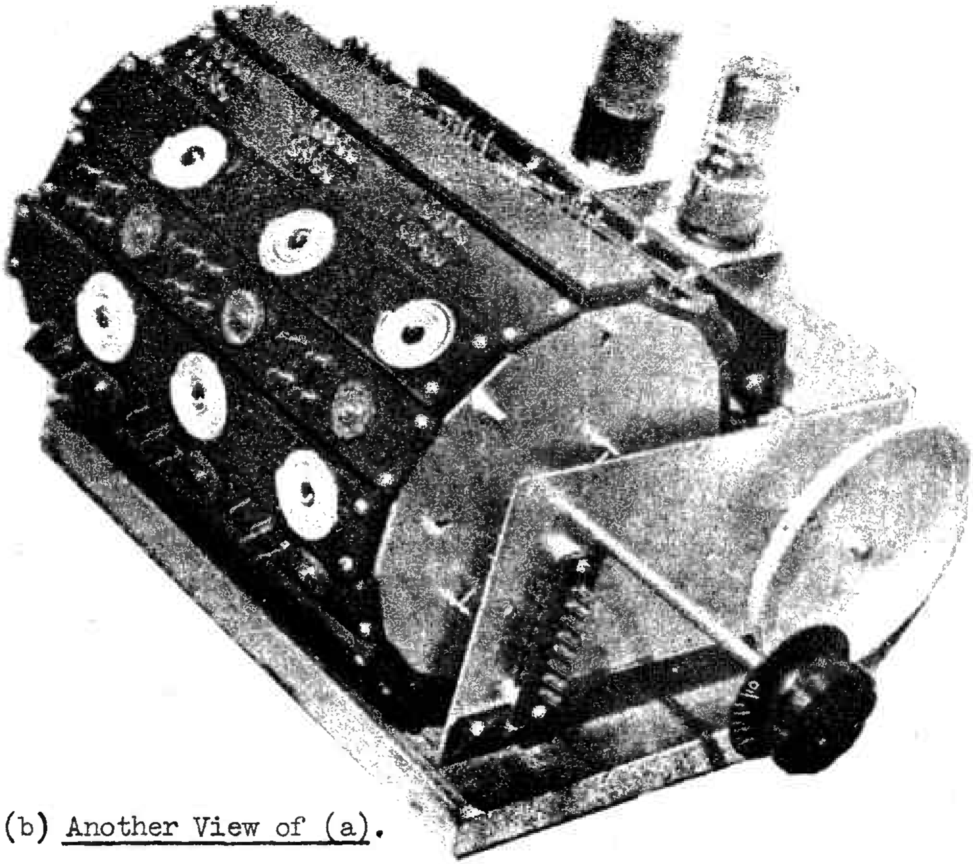

(b) Another View of (a).

TWO VIEWS OF EXPERIMENTAL FERRO-TUNED ALL-WAVE UNIT (KINGSLEY).

3.2 The important requirements of an oscillator for a radio receiver are -

(i) Frequency stability after warming-up period.
(ii) Minimum radiation of harmonics.
(iii) Accuracy of tracking (when ganged with other circuits).

(i) is required under following variable conditions -

(a) variation of supply voltage.
(b) application of A.V.C.
(c) variations of ambient temperature.
(d) replacement of tube.

In the normal superheterodyne receiver, the oscillator and converter comprise one valve, but in the higher quality communication receivers it is usual to find a separate oscillator valve. However, the principle of conversion is the same, and the requirements of the mixer valve are the same in each case and may be summed up as follows -

(i) Good signal-to-noise ratio.
(ii) Frequency stability.
(iii) Conversion conductance and gain.
(iv) Oscillator transconductance.
(v) Mechanical rigidity of electrodes.
(vi) Consistency from valve to valve.

These circuits may be used with separate oscillator valves or incorporated in some of the pentagrid, triode-hexode, etc., mixers. Schematic diagrams of several typical mixer circuits showing various oscillator arrangements are at the rear of this Paper.

3.3 Superheterodyne Receiver Oscillator. An oscillator supplying the oscillator voltage to a frequency changer must fulfil the following requirements if satisfactory operation is to be achieved -

(i) Self-oscillation must be easily realisable, that is, a minimum of feedback should be required.

(ii) Oscillation should be maintained over the desired frequency range without "blind spots" occurring, that is, frequencies at which oscillation ceases.

(iii) The variation in amplitude over the frequency range should be small.

(iv) The oscillator must not be liable to parasitic operation.

/(v)

(v) Supply voltage variations should have minimum effect on frequency.

(vi) The frequency should be independent of bias or supply voltage variations on the frequency changer.

(vii) Harmonic frequency voltages should be small.

(viii) Temperature and humidity variations should have minimum effect on the oscillator frequency.

3.4 Preserving Frequency Stability. The following summarises the steps which may be taken to improve the frequency stability of the oscillator in a receiver -

(i) A valve with a high mutual conductance and high anode resistance should be used.

(ii) Grid current should be as low as possible.

(iii) The coil resistance should be as low as possible.

(iv) The tuned circuit should be loosely coupled to the valve.

(v) The H.T. supply should be adequately decoupled and smoothed; the use of a voltage regulator for the oscillator is advantageous.

(vi) Decrease humidity effects by the use of non-hygroscopic insulating material, waxes and varnish.

(vii) Temperature frequency variations are reduced by mounting inductances and capacitances away from sources of heat, such as the Mains transformer, rectifier and output valves. Low loss coil formers of ceramic material are beneficial, together with rigid construction of coils, capacitances, etc.

(viii) Compensation by a capacitance having a negative temperature coefficient is usually necessary at ultra-high frequencies and is likewise useful at high frequencies.

3.5 Oscillators for H.F. and U.H.F. Receivers. Before concluding this Section, some remarks on the above should be of interest by showing how much more acute the problems associated with oscillator design are than at medium and low frequencies.

Oscillators for high and ultra-high frequencies are more prone to parasitic oscillations and more difficult to maintain in oscillation over a range of frequencies.

A high g_m valve is an essential since it enables looser coupling to be employed, and this reduces the tendency to parasitic oscillations. With tuned grid and tuned anode circuits, the feedback coil is often interleaved with the main tuning coil in order to obtain high coupling with a small feedback coil.

The ease with which the Hartley and Colpitts circuits can be made to oscillate is a great advantage at high frequencies, and the possibility of feedback coil frequency control is removed. The fact that the Hartley circuit tuning capacitor rotor is not earthed, and that the Colpitts requires a split stator, is no serious disadvantage on band spread receivers. The electron coupled circuit of Fig. 8c has the advantages of the Hartley, and also that one side of the tuning condenser may be earthed.

In cases where the tuning capacitor rotor cannot be earthed, the use of inductance (iron-dust core) tuning is an advantage.

Frequency drift of the oscillator due to changes of temperature is more serious as the frequency is increased, partly because the LC circuit components have to be reduced in value and also because the frequency error Δf_1 increases as the oscillation frequency rises. Thus, for a frequency change of 1 part in 10^3 the frequency drift is 1 kc/s at 1 Mc/s, whilst at 45 Mc/s it is 45 kc/s, sufficient to take the intermediate frequency carrier outside the band pass range of an intermediate frequency amplifier for amplitude modulated signals.

The need for short firmly-secured leads from the valve to the control LC circuit cannot be over-emphasized, and adequate decoupling with non-inductive mica capacitors (0.001 to 0.01 μF) of leads carrying D.C. or Mains A.C. voltages is essential. Only a very small inductance can provide undesirable coupling at U.H.F., and decoupling capacitors should be returned to the same point on the chassis. The use of radio frequency chokes also helps to minimise coupling effects.

4. GANGING THE OSCILLATOR AND SIGNAL CIRCUITS.

4.1 In order to reduce the number of receiver controls to a minimum, it is usual to couple mechanically the signal and oscillator capacitor rotor plates. Since the oscillator capacitance is required to serve its own circuit to a frequency greater than the signal frequency by a constant amount, a specially shaped rotor and stator are necessary to maintain the correct oscillator frequency.

This result is normally obtained with satisfactory accuracy by using a variable tuning capacitor for the oscillator section, which is identical with the capacitors used in the radio frequency sections but which employs an oscillator coil having less inductance than the inductance used in the radio frequency sections, combined with series and parallel trimming condensers as shown in Fig. 9.

/Fig. 9.

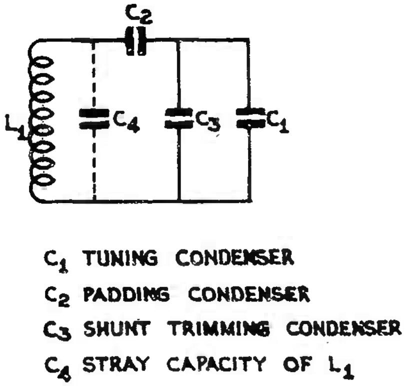

PRINCIPLES OF SERIES AND SHUNT TRACKING CONDENSERS.

FIG. 9.

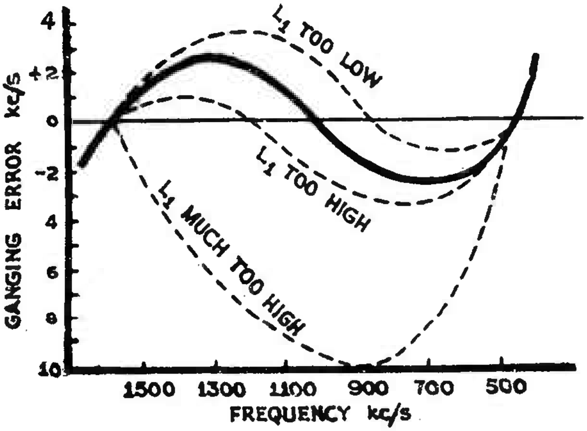

FIG. 10. TRACKING CURVE.

4.2 By properly proportioning such an arrangement, it is possible to obtain correct tracking at three frequencies in any tuning range with relatively small tracking error between these frequencies, as shown in Fig. 10. It is apparent that the maximum error in tracking is small enough to be negligible provided that the selectivity of the radio frequency sections is not excessively high. The best average oscillator tracking is obtained when the frequencies of exact tracking are so chosen that the maximum deviations of the tracking curve within the tuning range are all the same, as in Fig. 10. In all-wave receivers, each coil is provided with its own trimmer and padding condensers (coils are often inductance tuned as well for the low-frequency end of each range) and the combination of coil and condensers is switched across the variable tuning condenser. In practice, the adjustment of the shunt trimmer (C_3 in Fig. 10) determines the high frequency cross-over point, and the series padding condenser, C_2, is the principal factor controlling the low frequency cross-over. The middle frequency cross-over is determined by the inductance of the oscillator circuit.

5. SUMMARY OF RECEIVING CIRCUIT PRINCIPLES.

5.1 The principles of radio receiving circuits have been dealt with up to and including the intermediate frequency amplifier. A simplified diagram of portion of a superheterodyne receiver, including one radio frequency stage, combined oscillator/converter and first intermediate frequency stage, is given in Fig. 11. The oscillator is seen to be of the tuned grid type, tuned by C.13. C.14 is the shunt trimmer and C.15 is the series padder of the oscillator circuit. The intermediate frequency transformers are of the simple double-tuned type, and Automatic Gain Control (or A.V.C.) is provided over the three stages shown.

/Fig. 11.

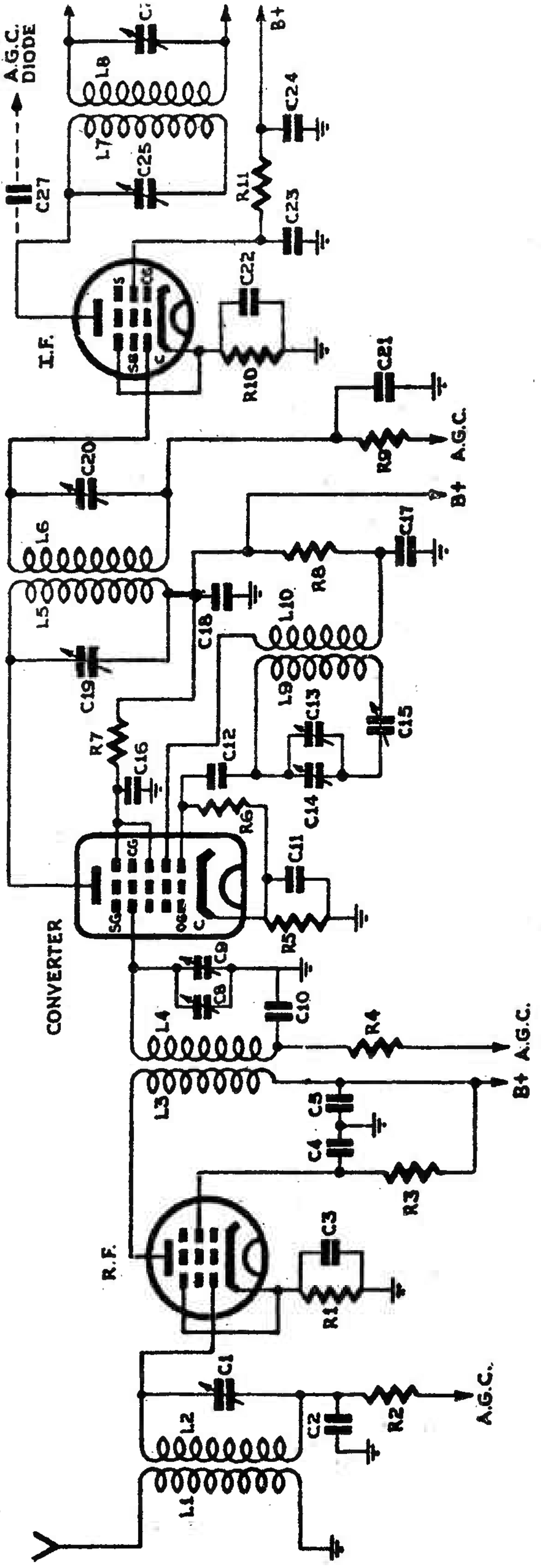

FIG. 11.

SUPERHETERODYNE RECEIVER.
(Radio Frequency Section Only.)

6. NOISE LIMITATION TO MAXIMUM AMPLIFICATION.

6.1 By careful design, a receiver may be constructed with very high amplification, and, in the absence of a limiting factor, it would be possible to obtain adequate output from even the weakest signal. The limiting factor is noise. Noise may be produced outside the receiver and picked up in association with the desired signal, or it may occur in the receiver itself. The desired signal, therefore, must be large enough to give with average modulation (about 30%) an audio frequency output very much greater than that contributed by noise. Generally, a signal-to-noise ratio of about 15 db. is regarded as the minimum satisfactory level. External noise may be due to static or to interference radiated by electrical machinery. Over these, the designer has little control, though he can mitigate the effects of the latter by means of filters, chokes and by-pass capacitors, etc.

Noise produced in the receiver may be classed as accidental and inherent. The former, caused by faulty components, can be eliminated by careful design and choice of components, the latter cannot. Inherent noise is due to thermal effects in the conductors and shot noise in the valves. In both instances it is usually only the first stages of the receiver that have to be considered since, in the later stages, the signal is amplified and is much greater than any noise likely to be produced in these stages.

6.2 Thermal Noise. It has been stated that all conductors contain free electrons, which are in a state of random motion, and each electron in motion constitutes a minute current. These transient currents produce voltages across the ends of the conductor, the frequency components of which cover an infinite band. The equivalent noise voltage may be computed.

The pass-band of the receiver must obviously affect the noise voltage, since the wider this is the more noise frequency components are brought in. The pass-band is defined as the range over which the response is greater than 70% of the maximum. Actually, frequencies outside the pass-band of the stages preceding any non-linear device, such as a frequency changer or detector, have a noise-producing effect because the non-linear device can produce intermodulation frequencies in the over-all pass-band from noise frequencies outside it. The actual volume of noise produced at the receiver output is dependent on whether a carrier is being received. If there is no carrier, the noise must supply its own, and, as this is small in value, the noise output is small. When a carrier is present, detection sensitivity is increased and the noise voltages act as sidebands giving greater output. Without A.V.C. increase of carrier up to a certain level, the noise output increases. At this level, the

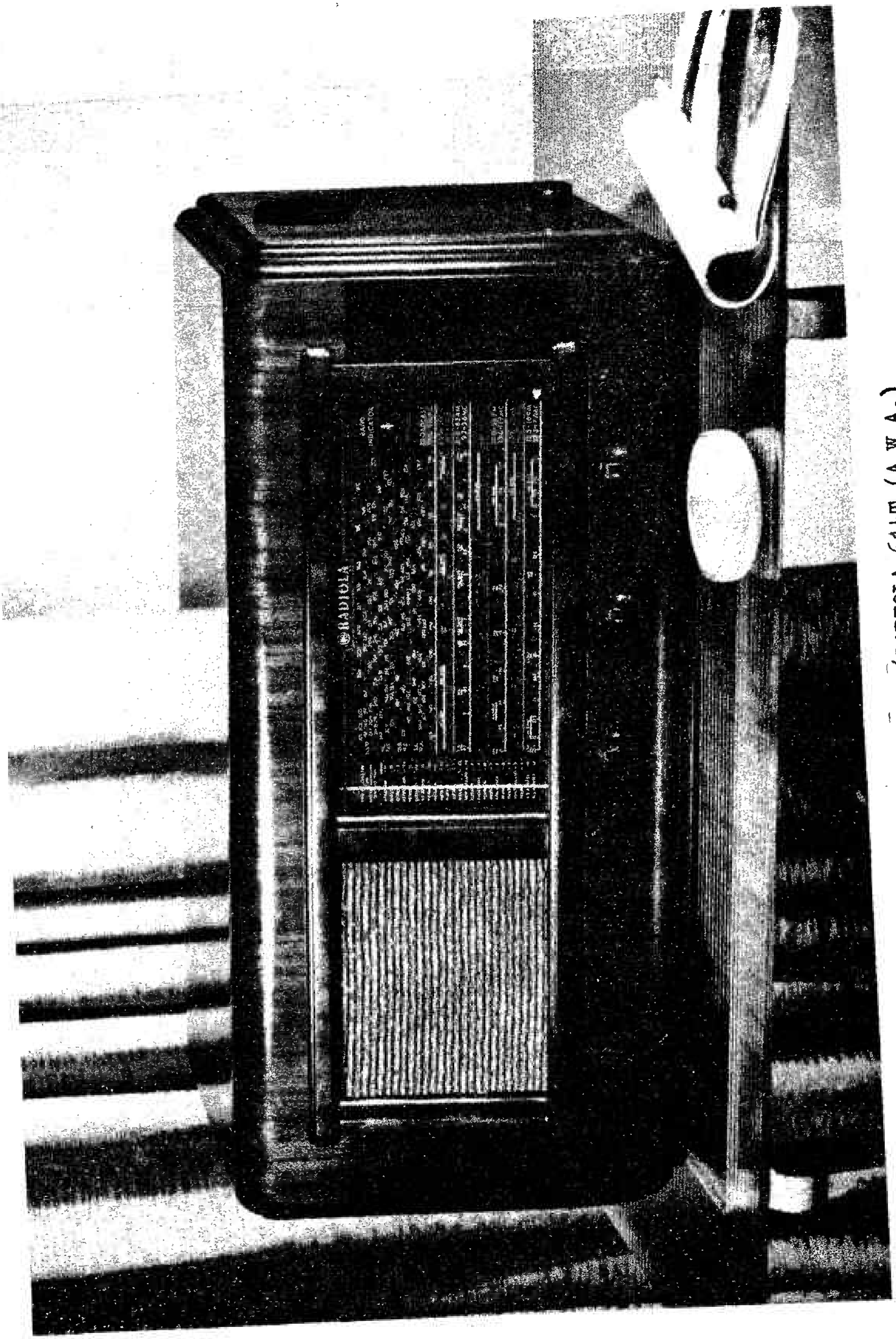

RADIO RECEIVER (RADIOLA 614T (A.W.A.)

detector has reached its linear condition and further increase of carrier does not alter the noise output. With A.V.C., noise increases with increasing carrier until the A.V.C. operating point is reached when the receiver sensitivity is decreased and the noise output reduced.

6.3 Shot Noise. Shot noise is produced by the flow of electrons from the cathode to the anode of the valve. Since the electrons comprising the anode current have random motion, the number arriving at the anode varies from one time instant to another. This is equivalent to a small variable current of infinite number of frequency components superimposed upon the mean D.C. current. It can be shown that shot noise is proportional to $I_a/g_m{}^2$

Where I_a = anode current, and
g_m = mutual conductance.

Hence, the best type of amplifier valve is one having these characteristics.

A convenient method of expressing shot noise is as the equivalent resistance between grid and cathode of a valve, which would give at room temperature a thermal noise voltage in the anode circuit equal to that produced by the shot noise.

The following table shows some average of shot noise resistance for several types of valve -

Valve Type	Shot Noise Equivalent Resistance.
Triode	200 to 500 ohms.
Special beam tetrode	4,000 to 5,000 ohms.
Ordinary screen grid and pentode	20,000 to 50,000 ohms.
Frequency changer	50,000 to 100,000 ohms.

Frequency changer valves are the worst because the conversion gain is never greater than $g_m/4$.

Screen grids and pentodes are poor because of secondary emission. The beam tetrode has the smallest shot noise of the multi-electrode valves because of the reduction of secondary emission, and the space charge reduces electron fluctuations.

If a radio frequency amplifying stage is incorporated in a receiver, the impedance of the first tuned circuit (except at U.H.F.) is greater than the shot noise resistance, so that thermal noise is the limitation. If, however, the first stage consists of a frequency changer, the reverse is generally true and shot noise is greater than thermal. It should be noted that in a frequency changer stage shot noise is introduced by the oscillator valve as well. Shot and thermal noise in the image or second channel region also add their quota. For a given over-all gain, a receiver without a radio frequency valve before the frequency changer has normally at least twice the noise voltage of a receiver with a radio frequency amplifier stage.

7. SHORT-WAVE AMPLIFICATION.

7.1 Amplification on the short-wave (high-frequency) range is chiefly complicated by the fact that selectivity is considerably reduced as the signal frequency is increased, and that in many receivers the complete range from 6 to 15 Mc/s is covered by one coil using the same tuning capacitance, without modification, for short-wave as well as medium and long-wave ranges. As far as broadcasting reception is concerned, this method has two disadvantages -

(i) tuning of the broadcast bands is made sharp and difficult.
(ii) a very small value of inductance is required which results in a low dynamic impedance and, consequently, low amplification.

Much improved performance can be realised by band spreading (selecting comparatively narrow bands in the H.F. range). These ranges can be made to overlap and the tuning capacitance range is reduced by the use of a series or shunt capacitance (or both) or, in some cases, much smaller tuning capacitances may be used. The latter usually have the advantage of lower losses, an important point at the higher frequencies (15 to 30 Mc/s).

7.2 High-Frequency Amplification. It has been shown that selectivity is a function of Q and the resonant frequency. The pass-band is defined by -

$$f_1 - f_2 = \frac{f_r}{Q}.$$

where $f_1 - f_2$ = band-width in kc/s.

f_r = resonant frequency in kc/s.

Q = "Q" of tuning coil.

so that as f_r is increased, the band-width is increased unless Q

/(a)

(a) Removing Cabinet from Mould.

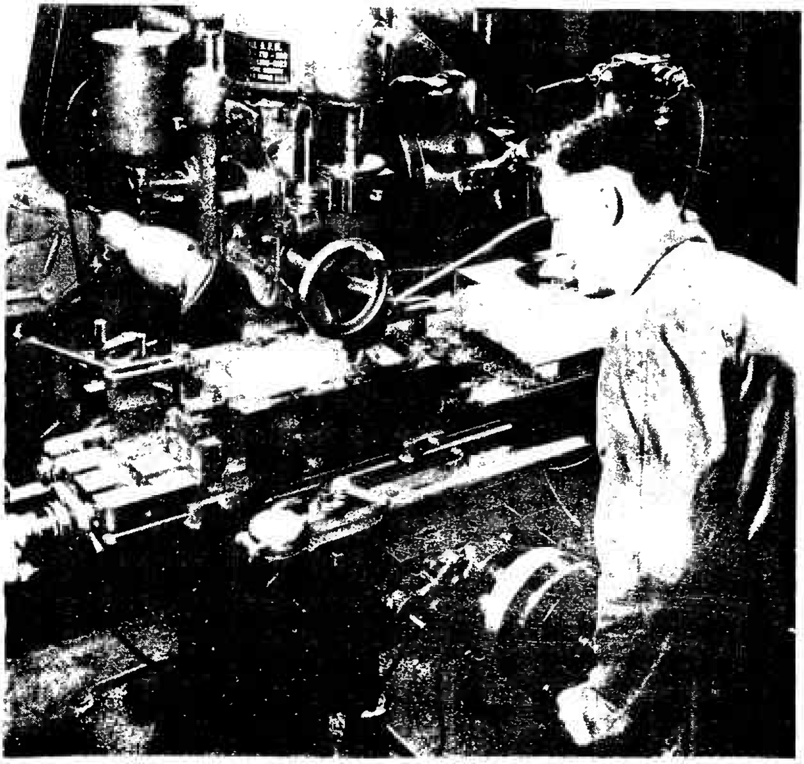

(b) Milling Operations.

PROCESSES IN MANUFACTURE OF MOULDED CABINETS (ELECTRONIC INDUSTRIES).

rises. The Q of short-wave coils is often high (150-200 is common) but dielectric losses, valve input conductance, etc., lower considerably the effective Q of the tuned circuit, and a probable maximum is 50 under good conditions. This gives band-widths of 120 and 300 kc/s at 6 and 15 Mc/s respectively. The radio frequency amplifier, therefore, only discriminates against undesired signal frequencies well separated from the desired. Adjacent channel rejection is achieved by the intermediate frequency amplifier. At an intermediate frequency of 465 kc/s, the image signal is down 24 db at 6 Mc/s and only 16 db down at 15 Mc/s, and additional image rejection is really necessary. Little can be done to improve selectivity unless regeneration is employed, but this lack of selectivity may be used to advantage in band spread receivers. Broadcast transmissions occur over certain narrow bands, seldom exceeding 200 kc/s width and centered at 6.1, 9.6, 11.8, 15.2, 17.8 and 21.6 Mc/s. By reducing Q to 30 at 6.1 Mc/s, transmissions from 6.1 to 6.2 Mc/s can be received with a maximum loss of 3 db, that is, the signal circuit can be preset tuned to 6.1 Mc/s and selection obtained by tuning the oscillator. At 15.2 Mc/s and over, no decrease in Q is necessary. To obtain maximum amplification, the signal tuning capacitance should be as low as possible consistent with stray capacitances, a minimum value being about 60 μμF.

For example, the required values of Q for a pass-band of 200 kc/s and the tuning inductance L for C = 60 μμF are listed below -

Frequency	Q	L	C
6.1	30.5	11.3 μH	60 μμF
9.6	48.0	4.6 μH	60 μμF
11.9	59.5	3.0 μH	60 μμF
15.2	76.0	1.8 μH	60 μμF
17.8	89.0	1.3 μH	60 μμF
21.6	108.0	0.9 μH	60 μμF

As it is unlikely that Q would exceed 50, the band-pass will increase and the amplification decrease about 12 Mc/s.

Consider now a communication receiver required to cover with overlaps the short-wave band 6 to 25 Mc/s as well as the medium wave band. Arbitrarily dividing into four overlapping ranges gives -

Range 1 ... 6-9 Mc/s.
2 ... 8.66-13 Mc/s
3 ... 12-18 Mc/s.
4 ... 17-25.5 Mc/s

/A

A frequency ratio in each case of 1.5 : 1, so that a capacitance change of 2.25 : 1, is required. Assume a linear frequency scale on medium band and the same relationship for the short-wave bands while restricting the equivalent tuning capacitance change. If the signal tuning inductance is 156 μH and its self-capacitance is 10 μμF, the following tuning capacitance values are obtained at equally spaced frequencies from 550 to 1,500 kc/s.

Frequency - kc/s.	550.0	788.5	1025	1263.5	1500.0
Capacitance - μμF.	526.8	252.0	145	92.0	62.17

The problem is to obtain frequencies on the short-wave ranges, separated by a constant amount, for these capacitance settings. Omitting the calculations, the following table sets out the effects of adding series padding and shunt trimmer capacitances to the circuit. It will be noted that - (See also Fig. 9).

(i) the series padder of 106 μμF gives a reasonably spaced scale, slightly cramped at the high-frequency end.

(ii) a shunt trimmer of 310.5 μμF gives an unsatisfactory scale appreciably cramped at the low-frequency end.

(iii) a series padder of 250 μμF and a shunt trimmer of 46.5 μμF give a scale very nearly linear.

(iv) a linear scale is shown in last column.

Capacitance Setting	Scale with (i)	Scale with (ii)	Scale with (iii)	Linear Scale	Range 4 under condition (iii)
526.8 μμF	6.0 Mc/s	6.0 Mc/s	6.0 Mc/s	6.0 Mc/s	17.0 Mc/s
252.0 μμF	6.52 Mc/s	7.32 Mc/s	6.73 Mc/s	6.75 Mc/s	19.1 Mc/s
145.0 μμF	7.2 Mc/s	8.13 Mc/s	7.51 Mc/s	7.5 Mc/s	21.3 Mc/s
92.0 μμF	8.02 Mc/s	8.67 Mc/s	8.29 Mc/s	8.25 Mc/s	23.5 Mc/s
62.17 μμF	9.0 Mc/s	9.0 Mc/s	9.0 Mc/s	9.0 Mc/s	25.5 Mc/s

From the point of view of maximum amplification over a tuning range, the series padding capacitance would be preferred to a combination of padding and shunt. Although the frequency scale may be less satisfactory, the equivalent tuning capacitance is less, and so the dynamic impedance $(\frac{L}{CR})$ is increased.

The values of padder and shunt capacitances selected have the same effect on all ranges because the maximum-to-minimum frequency ratios are the same. The last column of table shows the effect on range 4.

/8.

8. MISCELLANEOUS CIRCUITS.

8.1 The following miscellaneous circuits (Figs. 12, 13, 14, 15 and 16) may prove of interest.

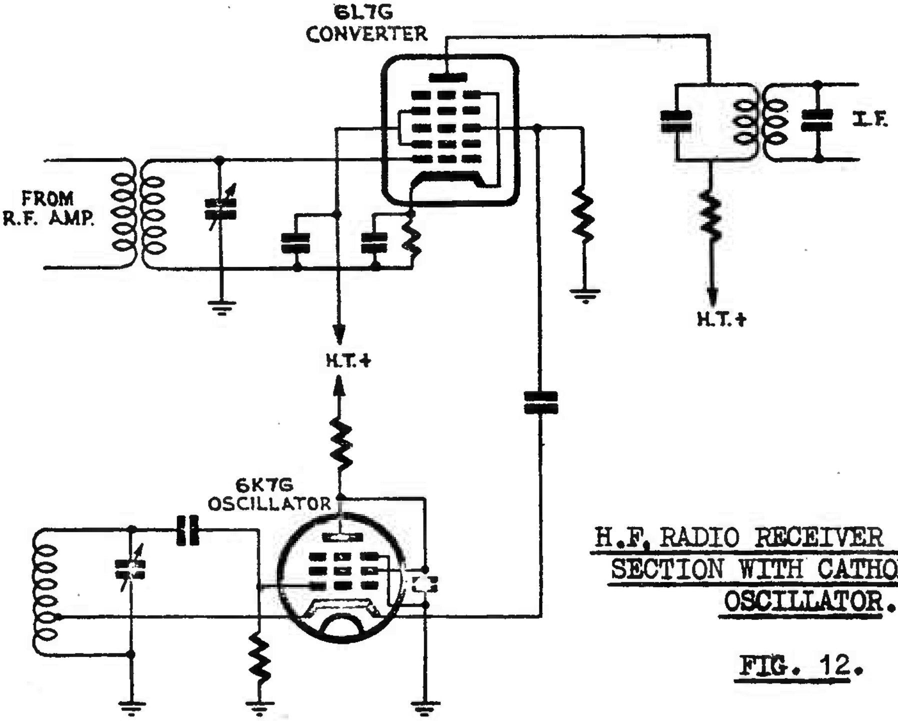

H.F. RADIO RECEIVER CONVERTER SECTION WITH CATHODE-TAPPED OSCILLATOR.

FIG. 12.

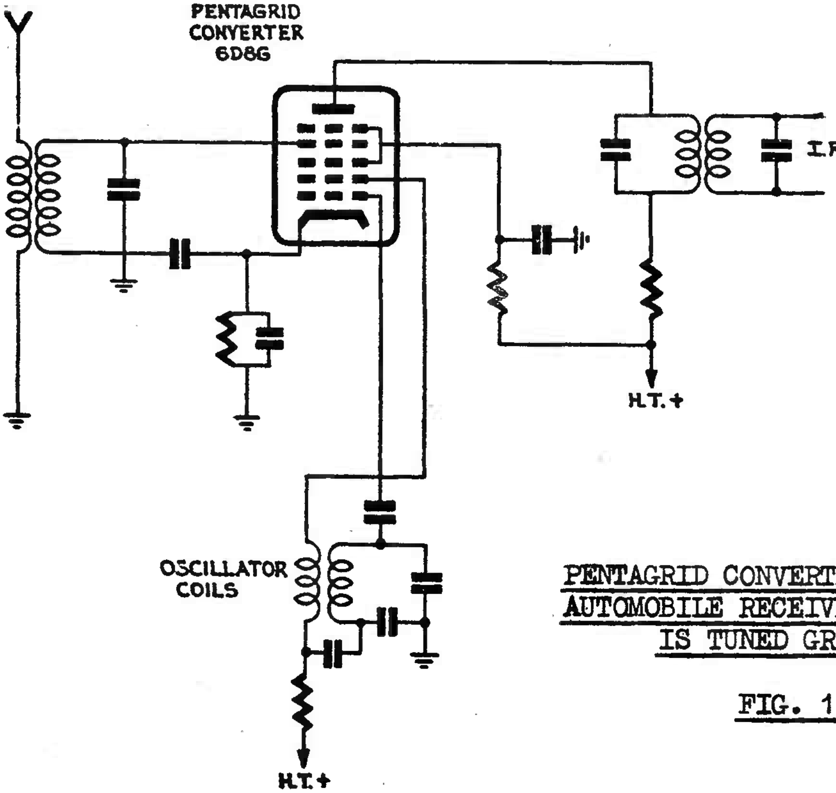

PENTAGRID CONVERTER SUITABLE FOR AUTOMOBILE RECEIVER. OSCILLATOR IS TUNED GRID TYPE.

FIG. 13.

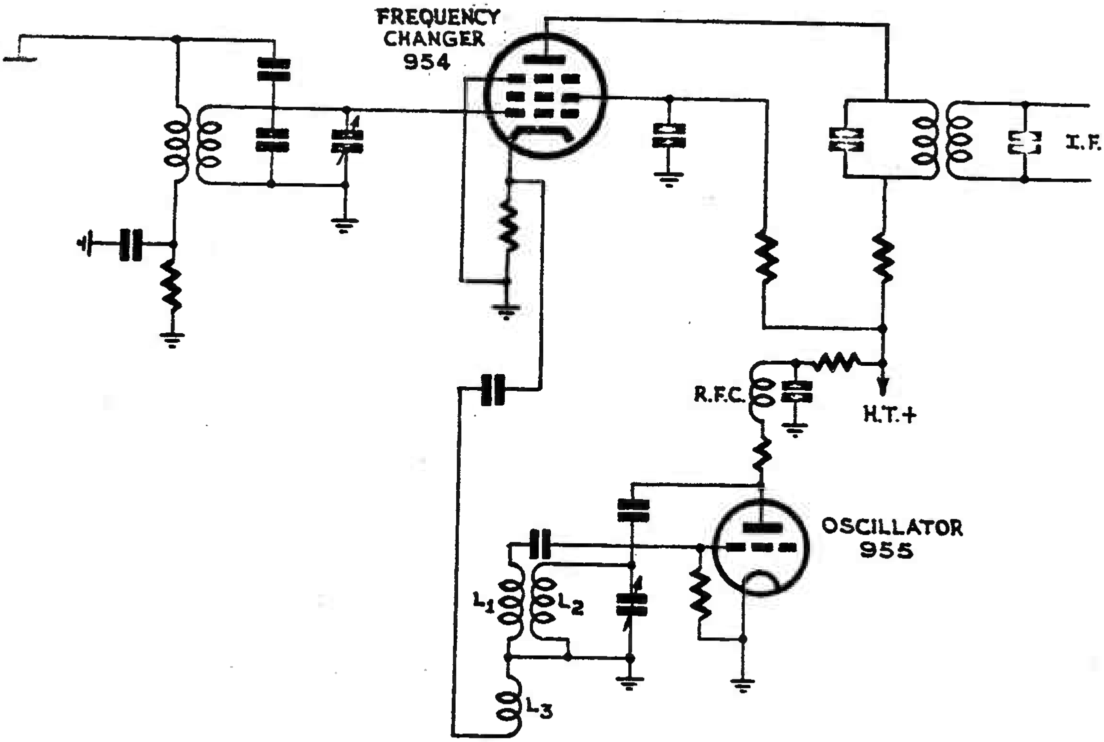

FIG. 14. FREQUENCY CHANGER SUITABLE FOR U.H.F. RECEIVERS.
L1 is grid coil, L_2 anode coil, L_3 cathode pick-up coil. (It will be noted that the oscillator is of the tuned anode type.)

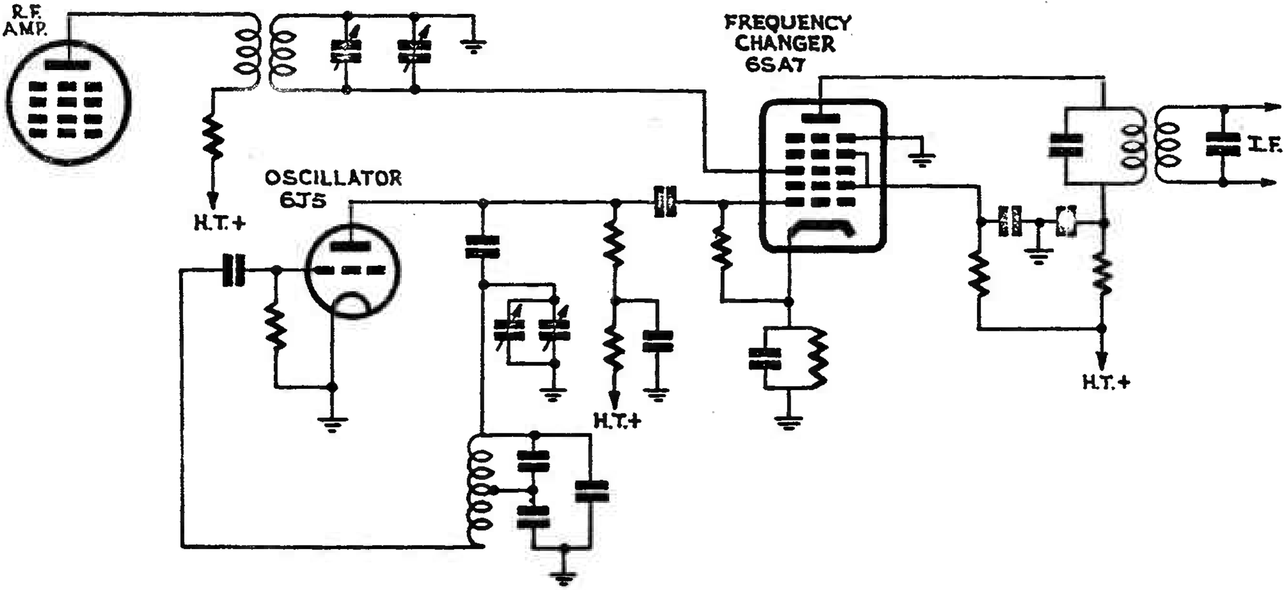

FIG. 15. FREQUENCY CHANGER FOR ALL-WAVE RECEIVER USING A SEPARATE OSCILLATOR WITH A MODIFIED COLPITTS CIRCUIT.

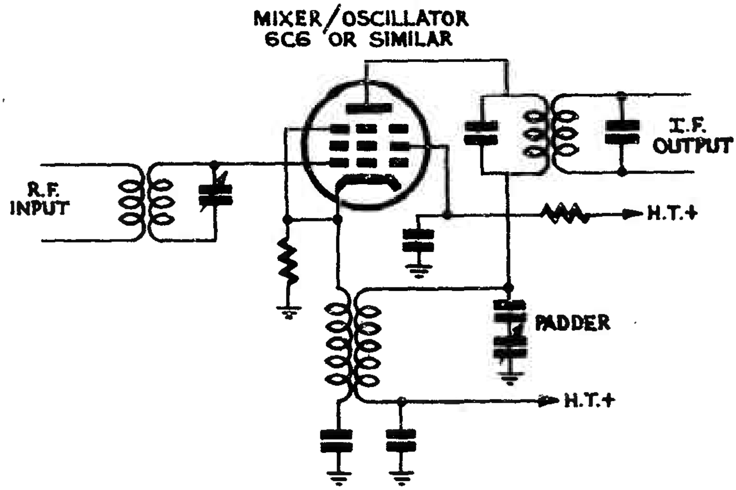

AUTODYNE CIRCUIT. (UNSUITABLE FOR H.F.).

FIG. 16.

9. TEST QUESTIONS.

1. What considerations govern the choice of the intermediate frequency in a superheterodyne receiver?

2. Briefly outline and illustrate the principles of electronic mixing and state one advantage over the heterodyne type.

3. Since the oscillator frequency is usually higher than the signal frequency by the intermediate frequency, how is it possible to gang the oscillator tuning condenser with the others?

4. What are the chief requirements of a frequency changer valve?

5. Stability of the oscillator is of great importance in a high-frequency receiver. Outline the steps that should be taken to improve the stability of this circuit.

6. What is meant by the terms "thermal agitation noise," and "shot noise"?

END OF PAPER.

COMMONWEALTH OF AUSTRALIA.

Chief Engineer's Branch,
Postmaster-General's Department,
Treasury Gardens,
Melbourne, C.2.

COURSE OF TECHNICAL INSTRUCTION.

RADIO II.

PAPER NO. 7.

RADIO RECEIVING PRINCIPLES (CONCLUDED).

CONTENTS:

---

1. DETECTION OR DEMODULATION.

1.1 The principles of detection were discussed in Radio I. This Paper refers to diode detection and associated circuits as usually found in a superheterodyne receiver.

1.2 Effect of the Coupling Impedance from Diode to Audio Frequency Amplifier. The audio output from the detector is transferred to the audio frequency amplifier through a capacitance-resistance coupling such as C_2R_2, shown in Fig. 1. Capacitance-coupling prevents application of the D.C. component across R_1 to the grid of the amplifier valve, which is biased separately to the optimum point. In addition, there is generally a resistance-capacitance filter, R_3C_3, to prevent the passage of radio frequency voltages to the audio amplifier, where these are likely to produce overloading and perhaps instability.

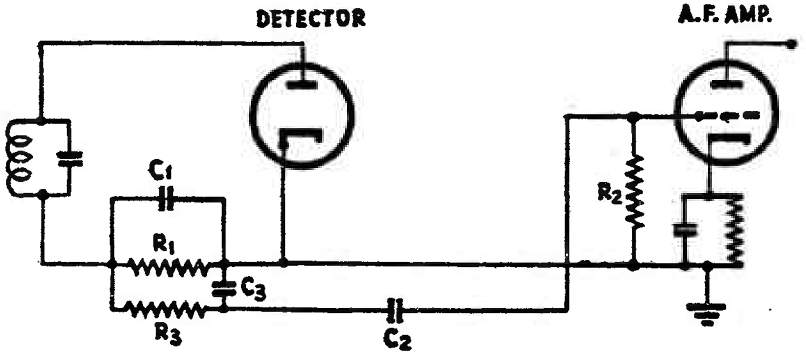

FIG. 1. DIODE DETECTOR - AUDIO FREQUENCY AMPLIFIER.

The capacitance of C_3 is about equal to C_1, so that its effect may be neglected at audio frequencies, and R_3 is usually much less than R_1. The actual value of R_3 is, to a large extent, controlled by R_2 since it forms with R_2 a potentiometer which reduces the audio frequency voltage across R_2 to $\frac{R_2}{R_2 + R_3}$ of that across R_1. Generally it has a value of about $\frac{R_2}{10}$. Adequate radio frequency filtering is then obtained without appreciable reduction of audio frequency voltage or frequency discrimination against the higher audio frequencies by C_3. The coupling reactance of C_2 must be small in comparison with R_2 at the lowest audio frequencies or frequency discrimination results. The resistances R_2 and R_3 are. thus in parallel with R_1 for all audio and radio frequencies. The effect of the coupling resistance R_2 is best known by reference to Fig. 2, which shows the characteristic curves of a diode; I_m being the mean D.C. current through the diode, and E_a the voltage developed in the load. The sloping lines represent different values of modulated input voltage to the detector. OB represents the load line for the condition where R_2 approaches infinity. Then, if a modulated signal E_1 is applied to the diode, the operating point will be at A.

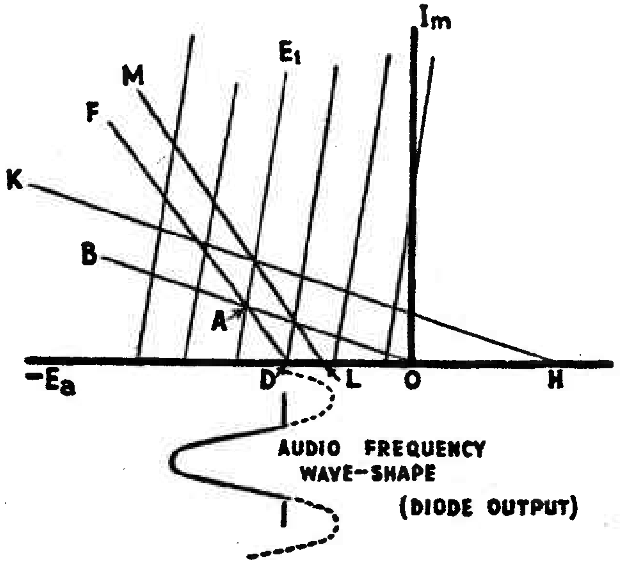

DIODE CHARACTERISTIC CURVES SHOWING IMPORTANCE OF KEEPING R_2 AT A HIGH VALUE
FIG. 2.

/The

The modulation envelope will travel up and down the line OB on either side of the point A, giving, for example, an output audio frequency wave-shape as shown by the dotted curves.

If, however, R_2 is reduced to a finite value (as is the case in practice) the load line may shift to the position DF; the same signal E_1 when applied to the diode gives the audio frequency wave-shape, shown by full curve. Two effects are noticeable in the latter case -

(i) the audio voltage from the detector has been reduced.
(ii) the audio wave-shape has become distorted by cutting off portion of one cycle.

It is thus important to keep R_2 at as high a value as possible. Biasing the diode positively will move the load line to a position HK for infinite R_2, or to LM with the same value of R_2 as in the second instance above. The distortion has been reduced by the amount DL (and output voltage increased) but there are several disadvantages resulting from biasing the diode, the main one being the damping of the tuned circuit feeding the diode input; thus, diode biasing is only used where circuit conditions are favourable.

2. AUTOMATIC GAIN CONTROL.

2.1 The single or half-wave diode is not often used in radio receivers, being mostly confined to power rectifier circuits. General custom is to combine a dual diode with another set of elements in the same envelope, giving compound valves such as diode-triode, diode-pentode, diode-triode-pentode, etc. The second diode-anode forms a convenient source of Automatic Gain Control (A.G.C.) voltage (also termed Automatic Volume Control, A.V.C.). This application will now be described.

2.2 Automatic Gain Control (A.G.C.). A.G.C. denotes the process by which the amplification of a receiver is controlled by the output carrier voltage, so that only small changes of the latter result from large variations of input carrier voltage. Its chief advantages are to minimise -

(i) fluctuations in loud-speaker volume when the signal is fading, particularly short-wave signals.
(ii) the unpleasant blast of loud volume when the set is tuned from a weak signal to a strong one.

The A.G.C. circuit accomplishes this by regulating the gain of the radio frequency and intermediate frequency stages (and sometimes the converter) so that the gain is less for a strong signal than a weak one. Thus, a large change in the input signal appears as a small change only in the loud-speaker volume.

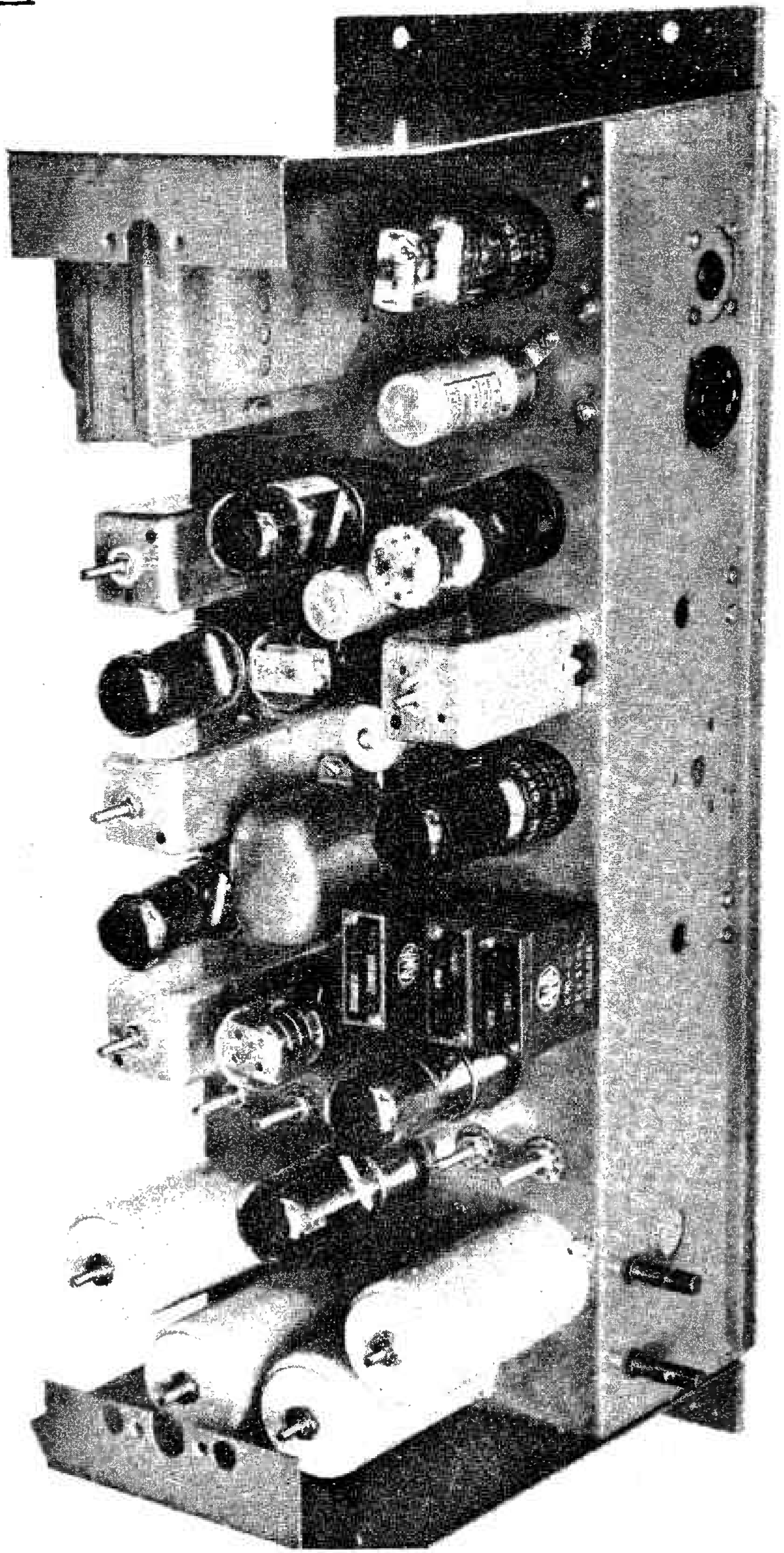

TELERADIO 4-CHANNEL FIXED FREQUENCY RECEIVER (A.W.A.).

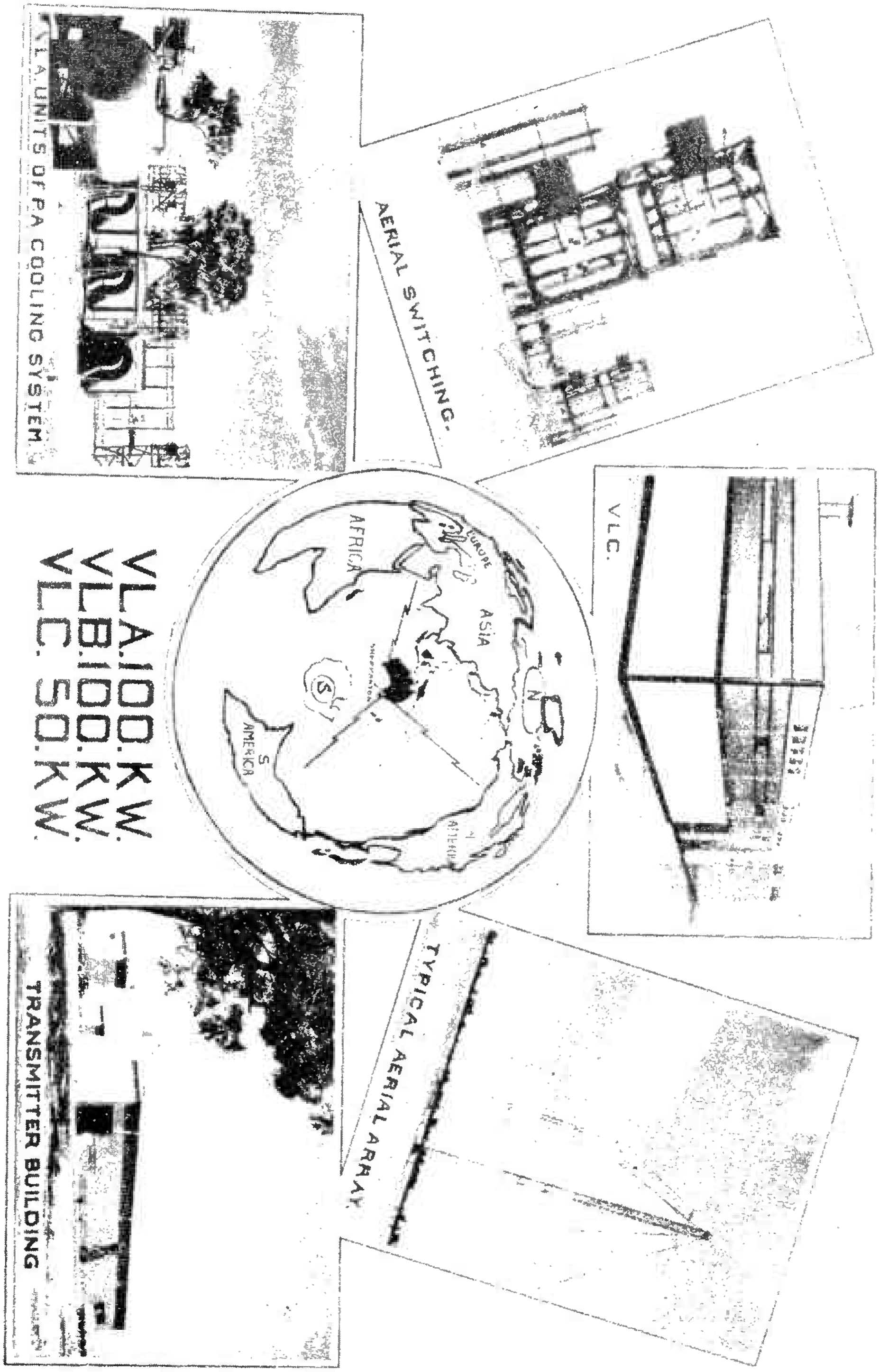

TYPE OF CARD USED FOR VERIFYING RECEPTION REPORTS. (QSL CARD).

A satisfactory system, therefore, must possess certain features -

(i) The control must be dependent on the output carrier voltage of the received signal but be independent of the modulation envelope.
(ii) It should be inoperative until the aural volume is adequate.
(iii) Variation in the receiver gain should not produce distortion.
(iv) The speed of control should be sufficient to follow normal fading.
(v) In superheterodyne receivers, the control should not cause appreciable variation of oscillator frequency.

The introduction of the variable-mu valve marked an important step in the history of A.G.C. as control of radio frequency gain by grid bias, derived from the D.C. component of the detected carrier output voltage, became possible.

2.3 Methods of Obtaining A.G.C. Bias Voltage. The A.G.C. bias voltage is always produced by detection of the output carrier voltage, the D.C. component of which is arranged to increase the negative bias on the radio frequency stages. Filters must be inserted to prevent application of the audio frequency modulation components to the grids of the radio frequency valves, and to decouple each radio frequency stage from the others so that instability due to radio frequency feedback may be prevented. Methods of deriving the A.G.C. are conveniently treated under two headings -

Non-amplified A.G.C., and
Amplified A.G.C.

2.4 Non-amplified A.G.C. Fig. 3 shows a simple form of A.G.C. bias circuit.

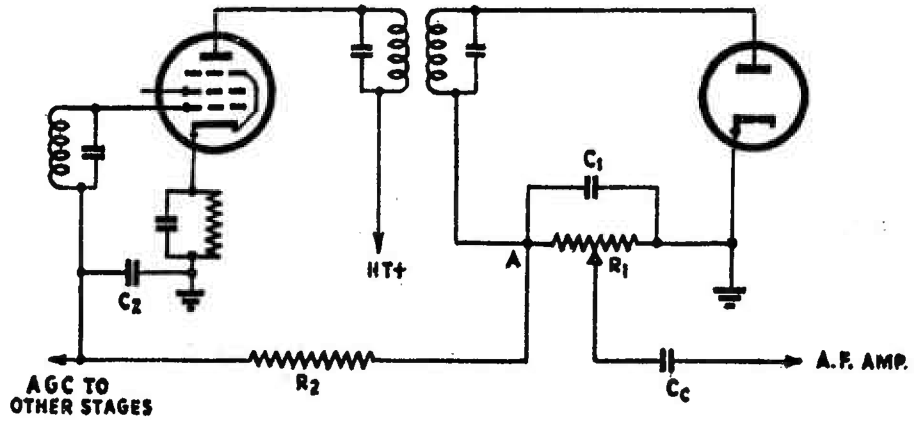

FIG. 3. SIMPLE AUTOMATIC GAIN CONTROL BIAS CIRCUIT.

The diode-cathode is earthed and the negative voltage, developed between A and earth when a carrier signal is received, is supplied through filters to the grid circuits of the controlled valves. The functioning may be explained as follows -

On each positive half-cycle of the signal voltage the diode passes current. Because of the flow of diode current through R_1 there is a voltage drop across R_1 which makes the left end of R_1 negative with respect to ground. This voltage drop is applied through the filter R_2 and C_2 as negative bias on the grid of the preceding stages. Then, when the signal strength at the aerial increases, the voltage drop across R_1 increases and the negative bias voltage applied to controlled stages increases, and their gain is decreased. Conversely, when the signal fades the bias decreases and gain increases. (It is not uncommon for a good receiver to hold the output volume within 3 db while the signal may change 50 to 80 db.)

The filter circuit R_2C_2 prevents the A.G.C. voltage from varying at audio frequency. This filter is necessary because the voltage drop across R_1 varies with the modulation of the carrier being received and, if the A.G.C. voltage were taken directly from R_1 without filtering, the audio variations in A.G.C. voltage would vary the receiver's gain and so smooth out the modulation of the carrier. To avoid this effect, the A.G.C. voltage is taken from the condenser C_2. Because of the resistance R_2 in series with C_2, this condenser can charge and discharge at only a comparatively slow rate. The A.G.C. voltage, therefore, cannot vary at frequencies as high as the audio range but can vary at frequencies high enough to compensate for most fading. Thus, the filter permits the A.G.C. circuit to smooth out variations in signal due to fading, but prevents the circuit from smoothing out the audio modulation.

Delayed A.G.C. In the circuit of Fig. 3 a certain amount of A.G.C. negative bias is applied, even with a weak signal. This will reduce the gain when it is usually most needed. Some circuits are designed not to apply A.G.C. bias until the signal strength exceeds a certain value. These circuits are known as "Delayed A.G.C." circuits, and it should be noted that they are not "time" delay circuits but "voltage" delay. Such a circuit is shown in Fig. 4. In this circuit, the diode section D_1 acts as detector and A.G.C. diode. R_1 is the diode load resistor and

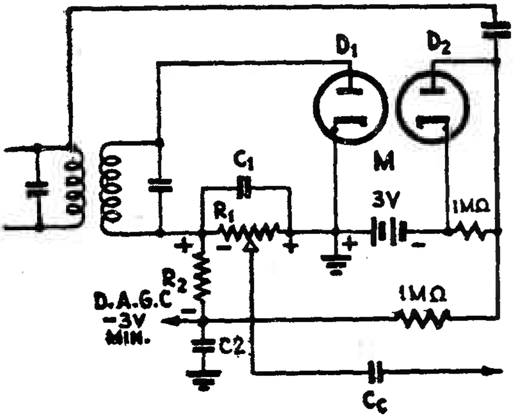

PRINCIPLE OF DELAYED A.G.C.

FIG. 4.

/R2

R_2 and C2 the A.G.C. filter. Because the cathode of diode D_2 is returned through a fixed supply of -3 V. to the cathode of D_1, a D.C. current flows through R_1 and R_2 in series with D_2. The voltage drop caused by this current places the A.G.C. lead at approximately -3 V. When the average amplitude of the rectified signal developed across R_1 does not exceed 3 V., the A.G.C. lead remains at -3 V. Hence, for signals not strong enough to develop 3 V. across R_1, the bias applied to the controlled valves stays constant at a value giving high sensitivity. However, when the average amplitude of rectified signal voltage across R_1 exceeds 3 V., the anode of diode D_2 becomes more negative than the cathode of D_2, and current flow in diode D_2 ceases. The potential of the A.G.C. lead is then controlled by the voltage developed across R_1, and A.G.C. action commences.

In this way, the circuit regulates the receiver's gain for strong signals but permits the gain to stay constant at a maximum value for weak signals.

A little thought will show that the reduction of gain will also reduce the A.G.C. voltage which is dependent on carrier level, and some receivers incorporate A.G.C. amplifier circuits in which the control voltage is brought to higher value. This enables improved control to be effected. This is explained more fully on Page 9.

Fig. 5 shows a more practical application of a delayed A.G.C. bias circuit.

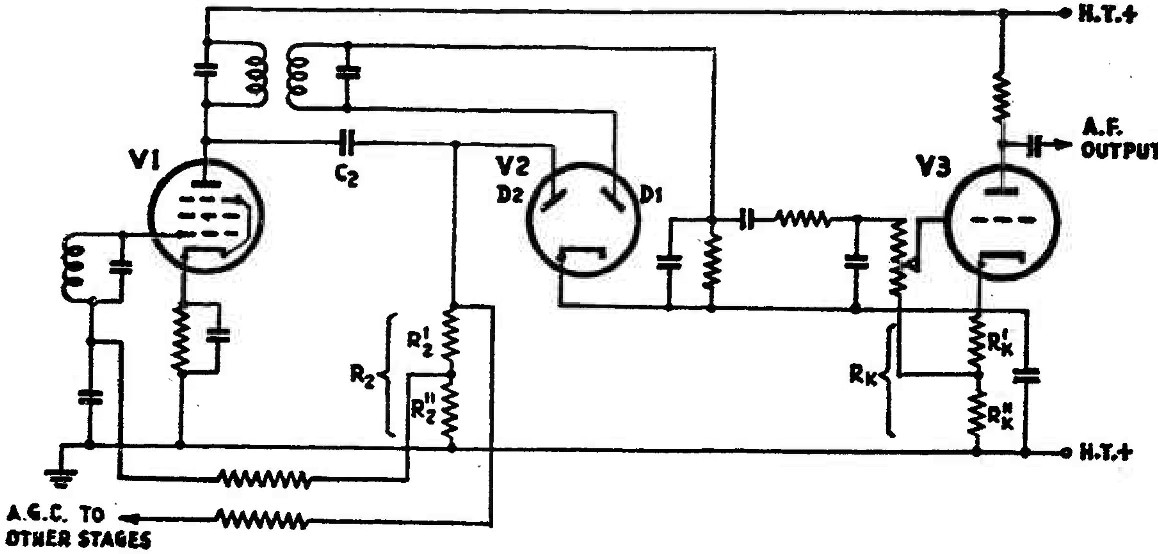

FIG. 5. DELAYED AUTOMATIC GAIN CONTROL CIRCUIT.

In this diagram, the cathode of the double-diode is taken to the positive end of a split resistance R_k inserted in the cathode of V3, the first audio frequency amplifier valve. The voltage across this resistance is applied as negative bias to the anode of the A.G.C. diode D2 by returning its load resistance R_2 to the earth line. The load resistance of the detector diode D_1 is connected to the cathode of the double-diode, and, hence, no bias is applied to it. Part of the voltage across R_k is also applied as bias to the first audio frequency valve by returning its grid leak to the junction of R_k' and R_k''. A combined double-diode-triode valve may be used for V2 and V3.

2.5 **Amplified A.G.C.** Distortion, due to a delay bias and to overloading of the valve preceding the A.G.C. diode, may largely be eliminated by amplifying the A.G.C. bias. The improvement normally obtained is due to an effective increase in the delay bias. There are two important methods of obtaining amplified A.G.C.

(i) By radio frequency amplification between the last controlled valve and the A.G.C. diode.
(ii) By D.C. amplification between the A.G.C. bias voltage source and the controlled valves.

Radio Frequency Amplified A.G.C. Radio frequency amplified A.G.C. in its simplest form consists of a fixed gain radio frequency amplifier inserted between the A.G.C. diode and the radio frequency valve supplying the audio frequency detector. The amplifier should have an almost flat pass-band for frequencies within about ± 20 kc/s of the carrier frequency, as this reduces the sideband screech in the off-tune position. Owing to the A.G.C. amplification, a larger delay bias may be applied to the A.G.C. detector without overloading the last controlled stage, and the A.G.C. action can consequently be improved. Fig. 6 shows a circuit for producing radio frequency amplified A.G.C. without additional valves.

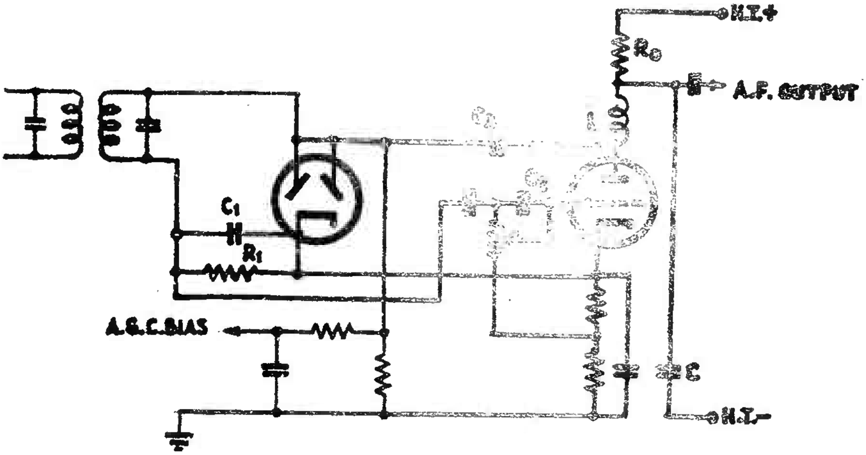

FIG. 6. RADIO FREQUENCY AMPLIFIED A.G.C. BIAS.

The valve following the audio frequency detector is used as a combined radio frequency and audio frequency amplifier. The radio frequency ripple voltage produced across the detector load resistance R_1 is passed to the grid of the triode amplifier by means of the capacitance C_2. This capacitance (100 µµF) allows wide variation of audio frequency volume without appreciably affecting the radio frequency voltage applied to the amplifier. A radio frequency choke L is inserted in the audio frequency amplifier anode circuit, and the capacitance C_3 transfers the radio frequency output voltage to the diode. Detection of the audio frequency anode voltages is avoided by making C_3 about 0.0001 µF. A disadvantage of this method is the danger of overloading the amplifier and distorting the audio frequency output voltage, the maximum value of which is reduced by the presence of the radio frequency voltage.

D.C. Amplified A.G.C. D.C. amplification of the A.G.C. voltage may be achieved by the circuit shown in Fig. 7.

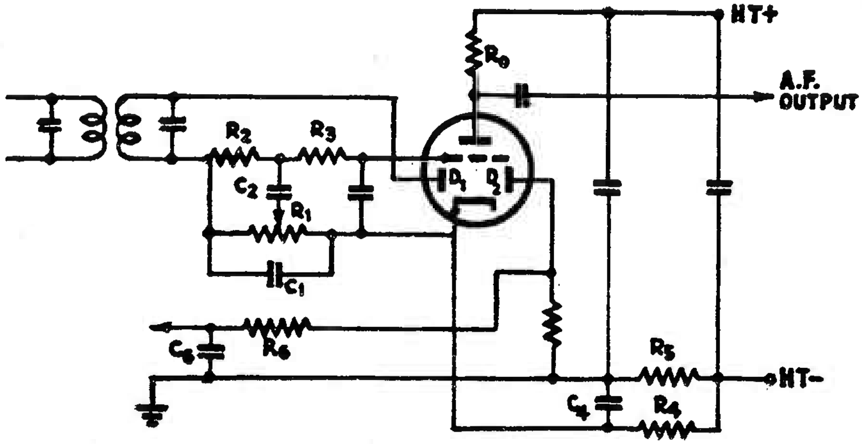

FIG. 7. D.C. AMPLIFIED A.G.C. CIRCUIT.

A source of negative voltage is required, and it may be provided by the voltage drop across a resistance R_5 between the earth line and high tension negative or by a separate high tension supply. The second method is generally more stable and free from hum. The A.G.C. voltage is derived from the cathode of the double-diode-triode valve through the diode D_2. Delay bias is obtained by adjusting the resistance R_4 to give, in the absence of a carrier voltage, a positive voltage on the cathode with respect to earth. A comparatively large capacitance C_4 (about 4 µF paper type not electrolytic) is connected from the cathode end of R_4 to earth in order to prevent audio frequency voltages being developed in the cathode circuit. The diode D_2 prevents positive bias being applied to the controlled valves since it cannot conduct with a positive cathode. The triode portion is biased from the audio frequency detector load resistance R_1, the

/voltage

voltage across which becomes increasingly negative as the applied carrier voltage increases. Consequently, the triode-anode current decreases and the voltage between its cathode and earth falls to zero from its initial positive **value** and finally becomes negative. Diode D_2 then conducts and a negative bias is applied to the controlled valves. The triode valve may be used as an audio frequency as well as D.C. amplifier, the audio frequency volume control being arranged to leave the D.C. bias of the valve unchanged. The resistance R_2 (about $4R_1$) and capacitance C_2 (about 0.01 µF) make this possible. It is undesirable that the radio frequency ripple voltage should be passed to the triode grid, and R_3 and C_3 form a radio frequency filter to prevent this. The audio frequency output voltage from the triode is developed across R_o. It should be noted that the variable D.C. bias on the triode section may cause distortion of the audio frequency output, because a large carrier voltage may take the operating bias voltage into the curved lower part of the triode I_aE_g characteristic.

2.6 Time Constant. An important feature of A.G.C. systems is the time constant, which is the time taken for the by-pass condenser to charge and discharge through the feed resistors. (Also referred to in the notes on detectors.) Excessive values of condensers or resistors will not allow the receiver to follow fast fading as encountered on the short-wave bands. In addition, the receiver tends to be sluggish to handle because an appreciable time elapses before the receiver recovers full sensitivity after having been tuned to a strong signal. More correctly the definition of time constant is -

> The time required for the voltage to increase to 63.2% of its final value or decay to 36.8% of its original value. It is found to be the product of the resistance (R) in ohms and capacity (C) in farads -

$$T \text{ (seconds)} = CR.$$

Fig. 8 shows typical curves for circuits, without A.G.C., simple A.G.C. and delayed A.G.C.

/Fig. 8.

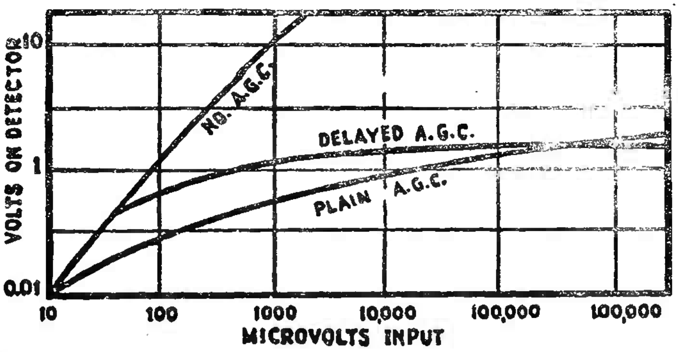

FIG. 8. CURVES FOR ILLUSTRATING AUTOMATIC GAIN CONTROL.

3. AUDIO FREQUENCY SECTION.

Audio frequency amplifiers were dealt with in Radio I. This book contains several typical circuits suitable for following the detector stage of a radio receiver. Methods of tone and volume control are also discussed.

The schematic circuit of a 9-valve superheterodyne receiver is given in Fig. 9 which may be regarded as a summary of the Papers on Radio Receiving Principles. Although only one set of radio frequency, oscillator and aerial coils is shown, the range of the receiver can be extended by including additional coils and switching facilities.

4. MISCELLANEOUS FEATURES OF RECEIVERS.

4.1 A number of features designed to improve the performance of radio receivers is found on modern sets. Typical of these are the following -

(i) Noise Limiter.
(ii) B.F.O. or C.W. Oscillator.
(iii) Tuning Indicator.
(iv) Push-button Tuning.
(v) Automatic Tuning Corrector.

4.2 Communication receivers are frequency provided with special arrangements for suppressing impulse type of noise, such as produced by ignition systems.

/Fig. 9.

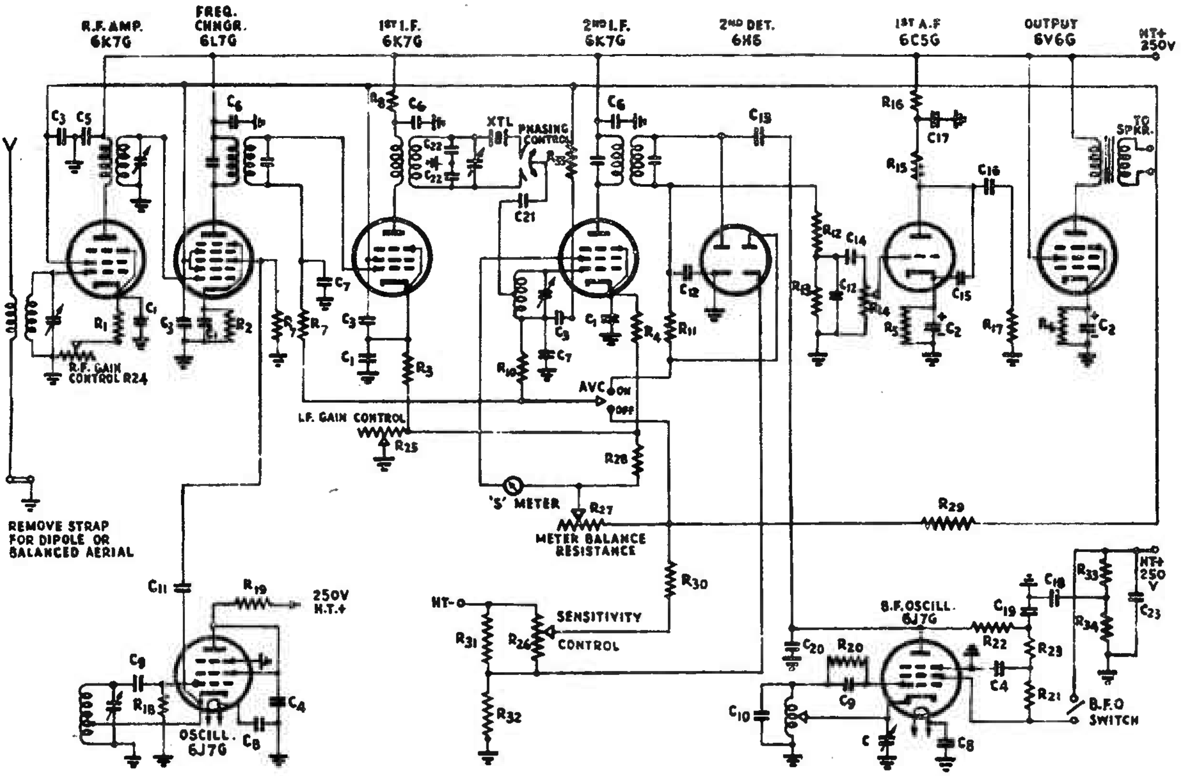

C_1	Capacitor	0.1 µF	Cathode decoupling.
C_2	Capacitor	25 µF	Cathode decoupling.
C_3	Capacitor	0.1 µF	Screen-grid decoupling.
C_4	Capacitor	0.01 µF	Screen-grid decoupling.
C_5	Capacitor	0.01 µF	Anode decoupling.
C_6	Capacitor	0.1 µF	Anode decoupling.
C_7	Capacitor	0.1 µF	A.G.C. decoupling.
C_8	Capacitor	0.1 µF	Heater by-pass.
C_9	Capacitor	0.0001 µF	R.F. and I.F. oscillator grid.
C_{10}	Capacitor	0.0005 µF	B.F.O. tuning.
C_{11}	Capacitor	0.0001 µF	R.F. oscillator coupling.
C_{12}	Capacitor	0.0001 µF	I.F. by-pass.
C_{13}	Capacitor	2-5 µµF	B.F.O. coupling.
C_{14}	Capacitor	0.01 µF	Audio coupling.
C_{15}	Capacitor	0.0002 µF	I.F. decoupling.
C_{16}	Capacitor	0.01 µF	Audio ocupling.
C_{17}	Capacitor	4 µF	Audio decoupling.
C_{18}	Capacitor	8 µF	Screen decoupling.
C_{19}	Capacitor	0.001 µF	I.F.B.O. decoupling.
C_{20}	Capacitor	0.0003 µF	I.F.B.O. filter.
C_{21}	Capacitor	10 µµF	Crystal filter coupling.
C_{22}	Capacitor	0.00015 µF	Crystal bridge.
C_{23}	Capacitor	8 µF	Smoothing.

R_1 R_2 R_3 R_4	300 ohms	Bias
R_5	3,000 ohms	Bias.
R_6	240 ohms	Bias.
R_7	50,000 ohms	Oscillator grid leak.
R_8	1,000 ohms	Decoupling.
R_9 R_{10}	250,000 ohms	A.V.C. decoupling.
R_{11}	2 megohms	A.V.C. coupling.
R_{12}	30,000 ohms	Audio diode load.
R_{13}	250,000 ohms	Audio diode load.
R_{14}	500,000 ohms	A.F. Volume control.
R_{15}	200,000 ohms	Anode resistance.
R_{16}	50,000 ohms	Anode decoupling.
R_{17}	500,000 ohms	Grid leak.
R_{18}	50,000 ohms	Oscillator grid leak.
R_{19}	10,000 ohms	Oscillator anode resistance.
R_{20}	100,000 ohms	I.F.B.O. grid leak.
R_{21}	50,000 ohms	I.F.B.O. screen dropping.
R_{22} R_{23}	10,000 ohms	I.F.B.O. anode.
R_{24}	10,000 ohms	R.F. gain control.
R_{25}	10,000 ohms	I.F. gain control.
R_{26}	100,000 ohms	Sensitivity control.
R_{27}	1,000 ohms	"S" meter bridge.
R_{28}	60,000 ohms	"S" meter bridge.
R_{29}	2,000 ohms	"S" meter bridge.
R_{30}	100,000 ohms	Sensitivity control decoupling.
R_{31}	300 ohms	Sensitivity control bias.
R_{32}	30 ohms	Delay volt bias.
R_{33}	3,000 ohms	Screen potentiometer.
R_{34}	2,000 ohms	Screen potentiometer.
R_{35}	2,000 ohms	Second I.F. screen decoupling.

9-VALVE SUPERHETERODYNE RECEIVER WITH A.G.C., B.F. OSCILLATOR AND SEPARATE RADIO FREQUENCY OSCILLATOR.

FIG. 9.

An example of a simple type is shown in Fig. 10, which consists of a diode shunted across an audio frequency coupling network and biased with a voltage slightly greater than the normal audio frequency signal at that point.

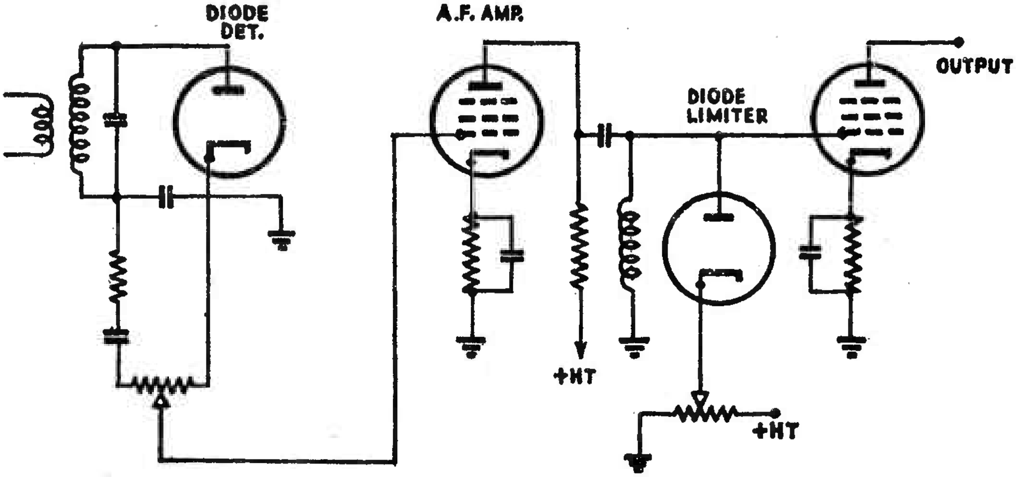

FIG. 10. SIMPLE NOISE LIMITED.

Any voltage in excess of the bias on the valve will be short-circuited by the valve, thus limiting the noise to a peak amplitude only slightly greater than that of the valve.

4.3 C.W. Oscillator. Received signals without modulation, that is, consisting of code signals made by keying the carrier, must be made audible. In simple receivers this is done by introducing "reaction." In superheterodyne receivers it is usual to provide an extra oscillator which may be switched in or out as required. This oscillator has a mean frequency equal to the intermediate frequency, and has a means of varying its frequency over a narrow range. The output is coupled usually into the 2nd detector circuit and, by beating with the intermediate frequency, produces an audible beat note. For example, if intermediate frequency were 465 kc/s the C.W. oscillator would be about 465 kc/s ± approximately 8 kc/s, giving a note which can be varied to suit individual taste. (Fig. 9 includes a C.W. oscillator.)

4.4 Tuning Indicator. A tuning indicator is particularly necessary in receivers fitted with A.G.C. since no definite indication of correct centring of carrier is given, and distortion will result by mistuning. Several forms are in common use, such as meters indicating the D.C. anode current going to the anodes of the valves that are controlled by the A.G.C.

Another type consists of a visual indicator valve in which the luminous area is a sector of a circle having an angular spread determined by the negative bias applied to a pair of control electrodes. By deriving this bias from the A.G.C. system, the size of the luminous area serves as a guide to tuning.

/Fig.

Fig. 11a shows the connections of what is commonly termed a "magic eye" valve.

This form of indicator contains a cone-shaped piece of metal (known as the target) coated with fluorescent material. Electrons emitted from the cathode impinge on the target and cause it to be illuminated with a green glow over a part or the whole of its surface. Two or more small rods act as grids and, when the anode voltage applied to them is altered, a shadow moves which opens and closes on the target. A small triode is also mounted within the envelope in order to amplify the voltage applied to the grid rods, that is, to improve the sensitivity. The grid of the triode is normally connected to the A.V.C. line in the receiver, with the result that the eye opens and closes in accordance with the tuning of the receiver. Fig. 11b shows a "magic eye" and its associated circuit in a radio receiver which can be either a T.R.F. or superheterodyne fitted with A.G.C.

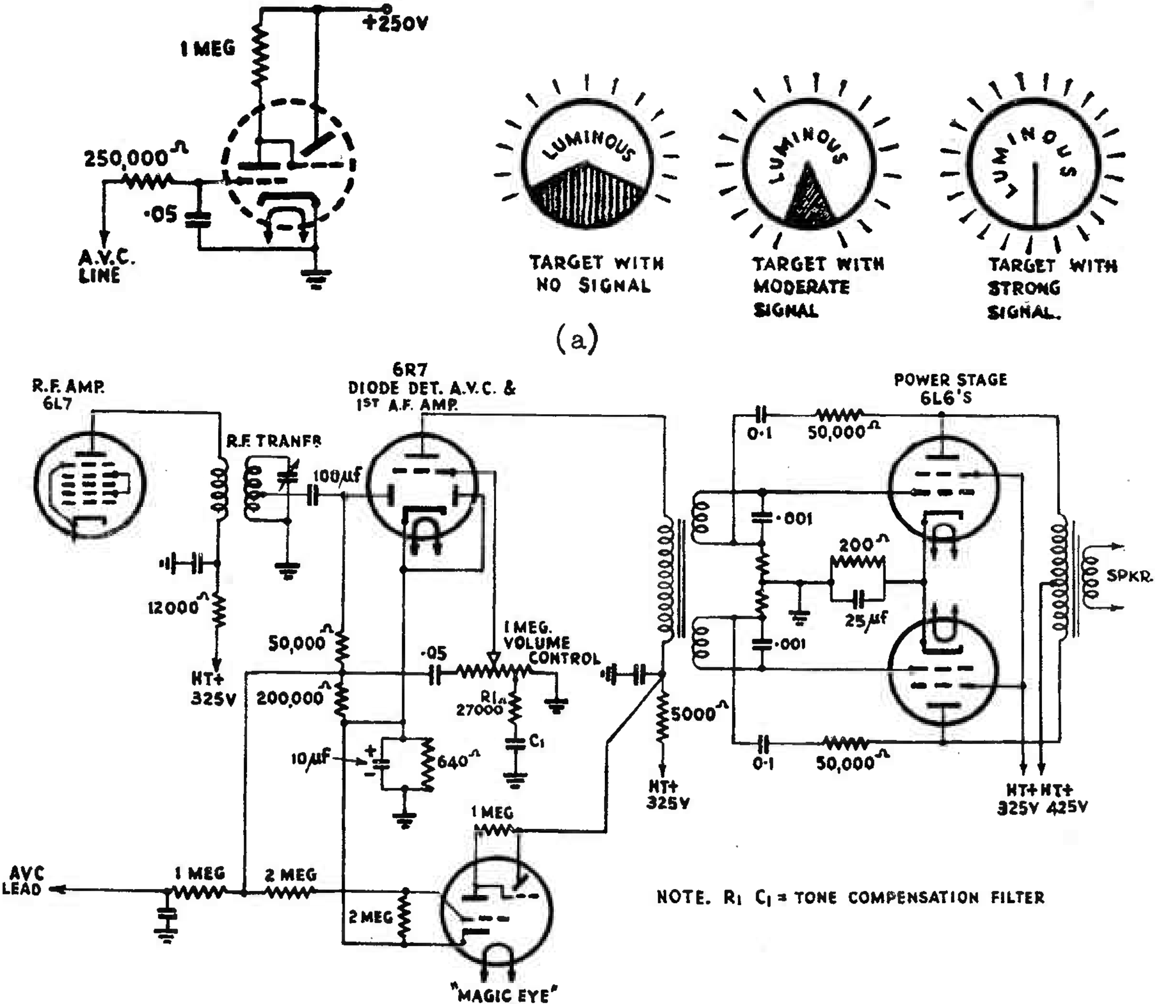

(a)

NOTE. R1 C1 = TONE COMPENSATION FILTER

(b)

FIG. 11. "MAGIC EYE" TUNING.

4.5 Pushbutton Tuning. Pushbutton tuning is incorporated in receivers so that predetermined stations may be tuned in immediately by pressing a switch. It is most easily adapted to tuned radio frequency receivers where the tuning is relatively broad, but with careful design can be adapted to superheterodyne receivers.

Some methods cause rotation of the tuning condenser by mechanical means or by means of a small reversible induction motor geared to the capacitor shaft. These methods also enable the manual tuning of stations to be carried out if desired. Details of these systems are beyond the scope of these notes, but an elementary sketch is given in Fig. 12 of a single-stage radio frequency receiver which enables the presetting of seven stations but provides no means of tuning to other frequencies. Capacity C is chosen so that it tunes the coil to the highest frequency required. Condensers C_1 to C_7 and C_8 to C_{14} are then "trimmed" to the required stations.

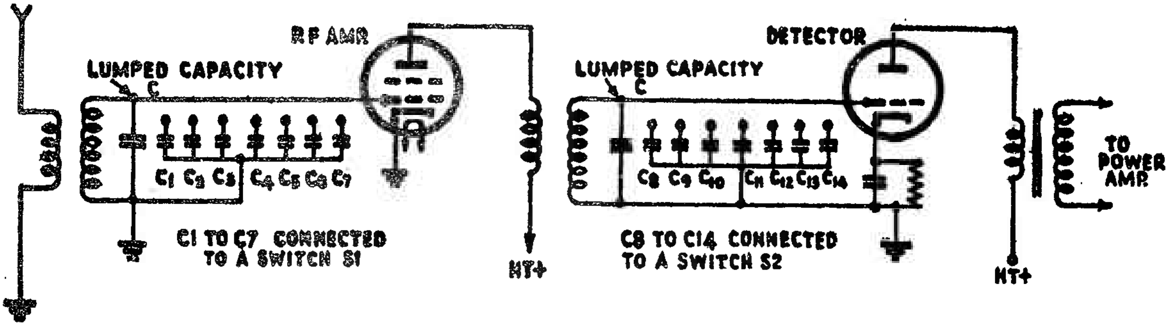

FIG. 12. PUSHBUTTON TUNING.

Another method, which permits remote control, makes use of a portable oscillator. Radio frequency pulses produced by interruption of the cathode supply to the oscillator are transmitted direct to the receiver. A tuned circuit coupled to a detector at the receiver accepts the pulses which operate a ratchet relay, selecting the required coil or capacitor. An automatic telephone type dial is used to interrupt the portable oscillator, and the required station is selected in accordance with the number of pulses transmitted.

4.6 Automatic Tuning Corrector. Two effects, sideband "screech" and harmonic distortion, become very pronounced if the intermediate carrier frequency at the output of the frequency changer stage of a superhet odyne receiver is not correctly centred in the comparatively narrow pass-band of the intermediate frequency amplifier. Sideband "screech" is characterised by high-pitched distorted reproduction, and it occurs when the intermediate frequency signal carrier is detuned to the side of the intermediate frequency selectivity curve. In this condition the equivalent of single sideband reception with over-accentuated hig frequency sideband components is obtained, because one set of side

/is

is almost entirely eliminated and the carrier and low-frequency sidebands are reduced by being outside the pass-range. Harmonic distortion of the audio output is caused by the diode detector when one set of sidebands is removed. With normal pass-band widths (± 5 kc/s) the maximum tolerable mistune is about ± 1 kc/s. Automatic correction of the oscillator frequency overcomes this difficulty by reducing the error produced by inaccurate tuning or frequency drift of the oscillator due to temperature and other effects. For example, a signal-tuning error of 5 kc/s may be reduced to an intermediate frequency error of 50 c/s by this method.

The two units of the automatic frequency corrector are a discriminator or error detector and a control device. The former translates the error in the intermediate carrier frequency into a voltage, the magnitude and sign of which is a function of the error. The latter, operated from the discriminator voltage, provides frequency correction of the oscillator tending to reset the carrier in the centre of the intermediate frequency amplifier pass-band. Circuit details will not be given here, the discriminator being the same as its name part in a frequency modulation receiver to be described later. The actual control may be effected by a motor-driven capacitor in the oscillator circuit by a variable reactance valve and other methods, but a complete description is not required in this Radio Course.

4.7 Miscellaneous Types of Interference which Degrade a Receiver's Output. Radio reception suffers from various forms of interference, etc., which tend to degrade the service. A brief reference will be made to those forms which cause most trouble. They may be broadly classified as follows -

(i) Cross-modulation.
(ii) Spurious responses.
(iii) Noise.
(iv) Hum.
(v) Fading.

(i) Cross-modulation. This is the name given to interference resulting from the interaction of radio signals in a receiver. It is heard under the following circumstances - The receiver is tuned to a strong local station (the "desired" signal) which is strong enough to require a low-gain condition of the A.G.C. At the same time there is another strong local station (the "unwanted" signal) operating on a frequency not greatly different from that of the station being received. During the silent periods of the desired signal the modulation of the unwanted station will be heard, but if the desired station closes down then the interfering signal disappears. It is mainly due to

/the

the uneven curvature of the valve characteristic at the operating point resulting from the strong signal. The amplitude variations of the "unwanted" signal suffer partial rectification (due to the curvature mentioned above) and modulate the carrier of the desired signal. This form of interference usually occurs in the first radio frequency valve, but the use of variable-mu valves reduces this effect considerably as was mentioned when discussing that type of valve.

Other forms of cross-modulation or crosstalk are given in paragraph (ii).

(ii) Spurious Responses. In superheterodyne receivers there is the possibility of obtaining a variety of spurious responses. Some of these appear in the form of whistles having a pitch dependent upon the tuning of the receiver; others cause an interfering program to be heard at unexpected places on the dial. The principal sources of spurious responses are -

(a) Image Frequency Signals. These have already been discussed in Paper No. 6, but the following additional points are mentioned -

The circuits between the aerial and converter input should give a discrimination of at least 60 db against the image signal relative to the signal to which the receiver is tuned.

(b) Signals of Intermediate Frequency. Radio signals of intermediate frequency will be heard in the output of a radio receiver if these signals are able to reach the converter valve at appreciable amplitude. Response to such signals can be prevented by selecting the intermediate frequency so that it differs from any strong local signal that is likely to be present. Improved rejection is often given by employing a wave-trap circuit in the network coupling the aerial to the grid of the first valve.

(c) Harmonics of the Intermediate Frequency Generated by the Second Detector. As already discussed in detail in Paper No. 6, whistles can occur in a superheterodyne receiver when the harmonics of the intermediate frequency that are present in the output of the second detector get coupled back into the radio frequency section. Thus, when a receiver having an intermediate frequency of 455 kc/s is tuned to approximately 910 kc/s or 1,365 kc/s, the second and third harmonics, respectively, of the intermediate frequency will produce an audible beat note with the incoming signals.

/Remedy.

Remedy. Provide filters in output of second detector that will localise harmonics. Arrange wiring to reduce coupling between radio frequency and second detector circuits.

(d) Harmonics of the Incoming Signal Generated in the Converter Valve. When very strong signals are being received at a frequency that is approximately twice the intermediate frequency, it is possible for high-order modulation to produce an output of this type 2S - 0. (S = signal frequency and 0 = oscillator frequency.) When the signal S is twice the intermediate frequency this gives a frequency equal to intermediate frequency, but the exact frequency varies differently with tuning, that is, with variation in 0, than does the intermediate frequency produced by normal converter action and so beats with the intermediate frequency produced normally. This type of response is generated in the converter and is not reduced by selectivity in the radio frequency stages, but may be minimised by reducing aerial pick-up or a wave-trap.

(iii) Noise. Much has been written regarding noise, but only a very short reference is included here. Typical sources of noise are -

(a) Noise induced in aerial.
(b) Thermal agitation in input circuit.
(c) Valve noise.
(d) Man-made.

(a) This type of noise of interference is due mainly to thunderstorms, electrical discharges between the clouds, interstellar static. It is sometimes separated into two types -

Atmospheric, and
Static.

Atmospheric -

(1) Impulses of very high intensity due to local thunderstorms.
(2) Steady rattling or crackling due to distant thunderstorms.
(3) Steady hiss observed at high-frequencies apparently having an interstellar origin.

Static - Discharges resulting from the accumulation of electrical charges on the aerial.
Precipitation static apparently due to impact of dust particles against the aerial or the creation of induction fields by nearby corona discharges.

Noise from Granular Resistances. Resistances composed of carbon granules generate noise in excess of thermal agitation noise when a D.C. is passed through the resistances. This high noise arises from contact resistance fluctuations between the granules. The resistors are thus unsatisfactory as anode-coupling resistances in low level stages of a resistance coupled amplifier. (See also Thermal and Shot Noise, Paper No. 6.)

(b) and (c) have been discussed in Paper No. 6, Frequency Changers, etc.

(d) Man-made. This type of interference may be caused by any of the countless devices that operate electrically, and may take the form of radio frequency waves such as are emitted from X-ray machines, diathermy devices, neon lights, motors, etc., or of low-frequency directly conducted surges that reach the receiver through the power lines.

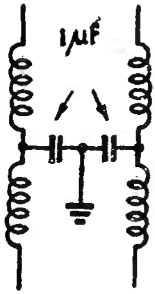

TYPICAL MAINS FILTER.

FIG. 13.

The first type is minimised by shielding adequately the machine or room and grounding the shielding.

The second is remedied by a low-frequency filter consisting of iron-coil chokes and condensers (about 1 μF) connected between the offending device and the power line. A less effective method is to connect it between the receiver and power line (see Fig. 13).

(iv) Hum. Typical causes of hum in a receiver are -

(a) Insufficient Filtering. Hum due to insufficient filtering is fairly obvious if the trouble is at the power supply, otherwise a careful check of the stages will reveal the circuit at which the reduction will be most beneficial.

(b) Induction into a High Impedance Circuit from a Nearby Conductor. This type of hum is particularly objectionable since it consists of a large proportion of higher order harmonics to which the ear is more sensitive than the fundamental frequency. It is usually caused by capacitive coupling, and the cure is isolation or shielding.

(c) Electromagnetic Coupling from a Power Transformer. Electromagnetic coupling may be reduced by the use of a non-magnetic chassis or separate power chassis, or sometimes by rotation of one component to obtain minimum coupling.

/(d)

(d) The Presence of a Magnetic Field near a Valve. A high-gain amplifying valve should not be placed in a magnetic field such as near a power transformer, filter choke or speaker field.

(e) Capacitive Coupling between the Heater and Other Electrons. Capacitance coupling between a heater pin carrying A.C. and a nearby gridpin is sufficient to cause hum in a high-gain amplifier. This may be reduced by earthing the heater on the side nearest the grid or fitting a potentiometer across the heater pins, the moving contact being earthed and adjusted for minimum hum.

In cathode type valves a centre-tapped transformer for supplying the cathode voltage is usual, condensers being added as shown in Fig. 14 to improve the filtering action.

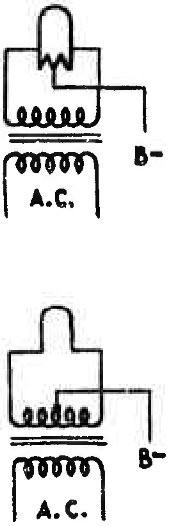

FILAMENT SUPPLY

FIG. 14.

(f) Leakage through Heater Cathode Insulation. Hum due to heater-cathode leakage may be reduced by generous by-passing, by connecting the cathode directly to chassis.

(g) Emission from the Heater to Other Electrodes or Vice Versa. Hum due to emission from the heater to the cathode may be eliminated usually by operating the heater at a voltage which is positive with respect to the cathode. Hum due to internal emission from cathode to heater may be eliminated by making the heater voltage negative to cathode. In both cases, it is inadvisable to use a voltage which is higher than is necessary to reduce the hum.

(h) Modulation Hum. This hum is only apparent when receiver is tuned to a carrier. Some causes are -

1. Lack of filtering.
2. Coupling from the mains, generally through the power transformer.
3. Insufficient earthing.
4. Heater-cathode leakage in convertar or radio frequency amplifier valve.

It is always advisable to employ an electrostatic screen in the power transformer between primary and secondary.

In superheterodyne receivers modulation hum may also be due to insufficient filtering of the oscillator anode supply, particularly when fed through a resistance-capacity filter directly from filament of rectifier valve.

/Miscellaneous

Miscellaneous Remedies.

Arrange wiring to give minimum hum pick-up.
Use short leads and rigid wiring.
Twist together leads carrying A.C. or radio frequency.
Check for dry joints.
Apply negative feedback to a stage introducing hum.
Shielding and screening, etc.

(v) Fading. Fading, which results in a variation of signal strength at the receiver, is caused by the signal arriving at the receiver by several routes, the waves being out of phase as a result of the different distances travelled. The resultant signal is the vector sum of the several waves and, if their magnitudes are equal, their phase relationship may be such that no signal is received. This can apply to any combination of ground and sky waves, or sky waves alone. This type of fading is relatively slow and is minimised to a reasonable extent by the use of A.G.C. in a receiver.

Selective Fading. Under some ionosphere conditions fading is sensitive to frequency, with the result that the carrier and the various sideband frequencies do not fade in and out together. This is termed "selective fading" and results in severe distortion of the modulated wave.

Another form of fading, which usually occurs at night, is caused by changes and disturbances in the ionosphere. The result is fading at a relatively fast rate and is known as "flutter fading."

5. SYSTEMS FOR IMPROVING RECEPTION.

As a result of the serious effects of fading much investigation has been carried out with a view to improving reception, especially over relatively long distances. Two interesting systems will be mentioned -

Diversity receiving systems.
Musa receiving systems.

5.1 Diversity. Typical diversity systems are -

(i) Space Diversity. This makes use of the experimentally observed fact that signals induced in aerials 5 to 10 wavelengths apart fade independently. When three or more such aerials are employed with separate receivers it is extremely unlikely that a resulting signal obtained by combining the three outputs will fade out completely.

/A

A commonly used system consists of three aerials and three receivers with the audio outputs commoned. The A.G.C. voltages developed by the separate receivers are added directly and the combined voltage used to control simultaneously the gain of the three receivers. In this way, the channel that receives the loudest signal dominates the situation at the moment and the other channels contribute little or nothing to the output, either in the way of noise or signal.

(ii) Frequency Diversity. By tuning each receiver to a different frequency (carrying same programme) an improvement on the above is sometimes obtained due to the different propagation conditions associated with different frequencies. This is sometimes referred to as "frequency diversity," though the name has a different application when associated with radio telegraphy. A typical set-up is shown in Fig. 15a.

(iii) Polarisation Diversity. This is a variant of (i) in which aerials designed to accept signals of different polarisation are used. It is based on the fact that horizontally and vertically polarised signal-components do not fade together. Fig. 15b shows the tracing of a recorded test of diversity reception.

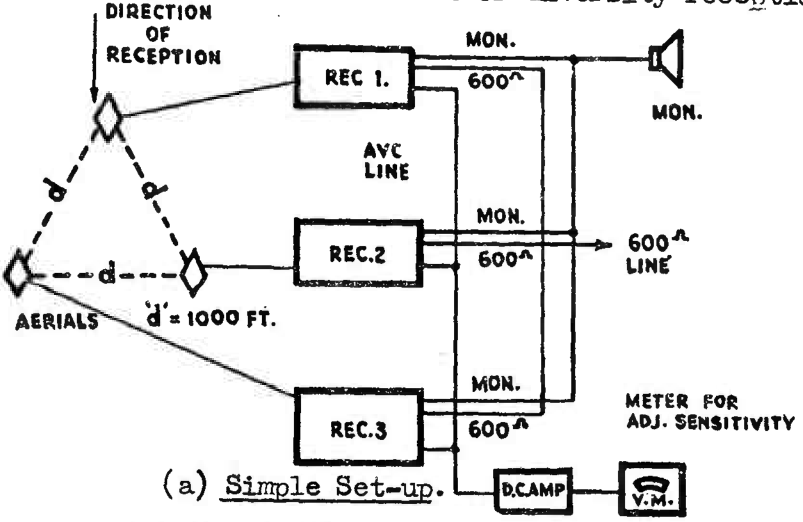

(a) Simple Set-up.

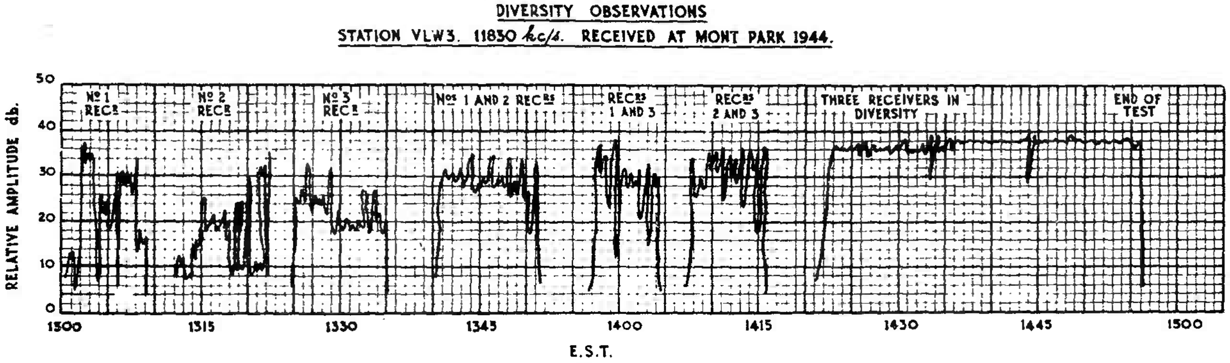

(b) Observations.

FIG. 15. FREQUENCY DIVERSITY.

5.2 Musa System. This is a complex system making use of the fact that short-wave signals arrive at a receiver at certain preferred vertical angles that are relatively stable over an appreciable time interval, that the signal at a particular angle fades in magnitude but possesses little if any quality distortion and that the envelope delay of the incoming signal is greater the higher the angle of arrival. This envelope delay is also phase difference and, in practice, the outputs of a number of aerials are phased so that the resultant output consists of each aerial's pick-up at a certain vertical angle. A method of determining the best angle for the moment is incorporated, and the phase shifting is operated by a common control. The "Musa" is derived from the words "Multiple Unit Steerable Aerial," and one system in use has 16 rhombic aerials spaced along a straight line.

The Musa system is the most effective arrangement that has been devised for short-wave reception but is rather too complex for a detailed description.

6. RECEIVING AERIALS.

6.1 Most of the aerials used for transmitting are suitable also for reception, but there are one or two points associated with reception that should be referred to.

Broadcast receiving aerials should usually be omni-directional since signals are received from most directions.

Some measure of relief from local disturbance can be obtained by using a shielded lead-in from the aerial because a lot of these interfering waves are vertically polarised and shielding will reduce the pick-up from this source (see Fig. 16).

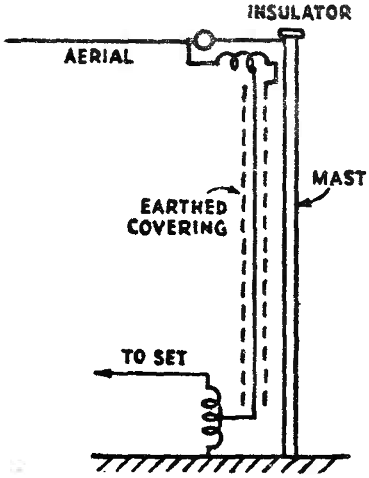

SHIELDED AERIAL.

FIG. 16.

Loop aerials are useful in reducing interference in some cases but have the disadvantage that they are somewhat directive and need to be rotatable. Enclosing the loop in an electrostatic shield will also reduce noise from near-by sources, and the loss in signal strength is not of great account with the receivers available today.

Rhombic aerials are useful for receiving as well as transmitting, and provide, as well as gain, a certain discrimination against noise originating at angles to their major direction of reception.

/U.H.F.

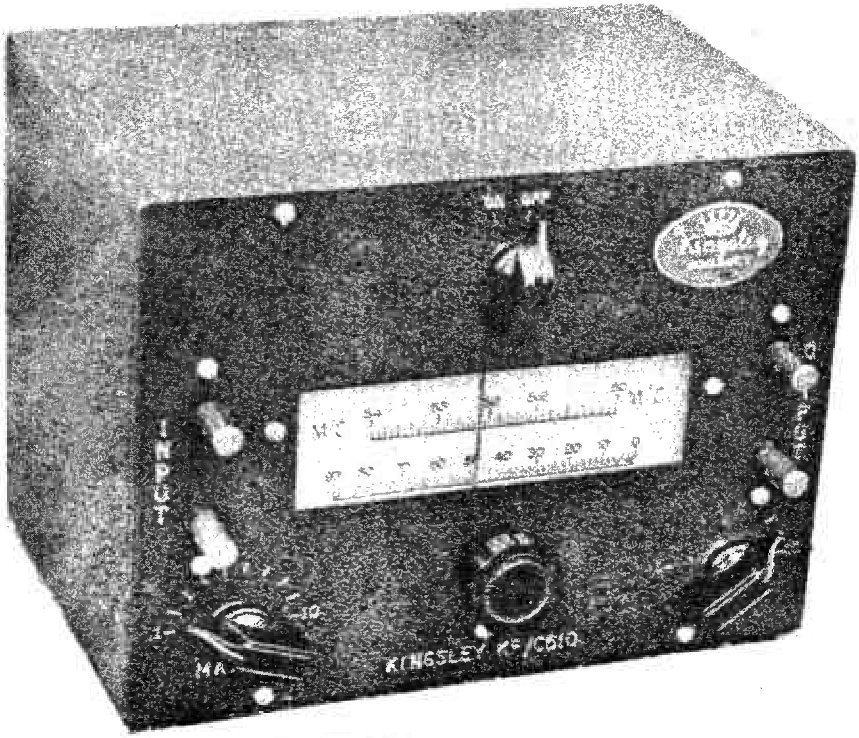

U.H.F. TUNER (KINGSLEY).

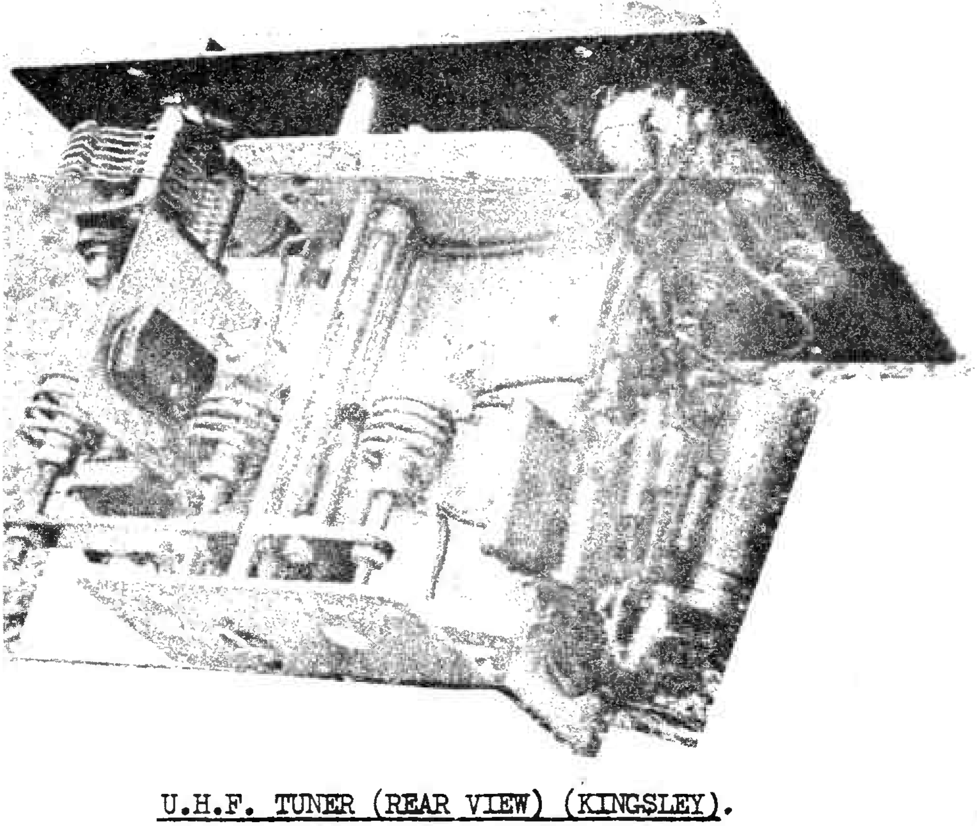

U.H.F. TUNER (REAR VIEW) (KINGSLEY).

Beverage (or Wave) Aerial. This is a form of non-resonant aerial useful mainly for medium and long-wave reception. It consists of a wire ranging from one-half to several wavelengths long, pointed in the direction of the transmitting station and mounted at a convenient height. The end towards the transmitter is grounded through an impedance approximating the characteristic impedance of the aerial when considered as a single-line with ground return.

The energy extracted from the wave is delivered to the receiver at the end farthest from the transmitter.

This aerial abstracts energy from passing waves due to the wave tilt that the earth losses produce in vertically polarised low and medium wave signals travelling along the surface of the ground.

When the wave is travelling towards the receiver along the wire, the currents induced in different parts of the wire all add up in phase at the receiver because the currents induced in the wire travel with the same velocity as the wave and keep in step with each other.

Current built up in the other direction is dissipated in the resistance; thus the aerial is unidirectional.

Fig. 17a shows the Beverage aerial and Fig. 17b its directional characteristic. Fig. 17c shows the method which may be used if it is necessary to run the wire away from the receiver. Two wires are used in this case. Since this type of aerial depends on ground losses it is unsuitable for transmitting.

/Fig. 17.

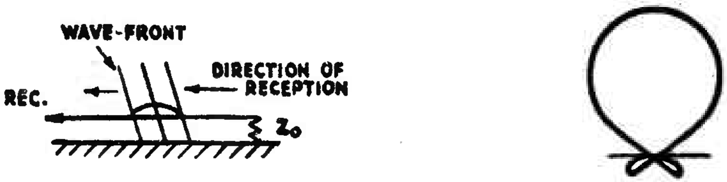

(a) Aerial. (b) Directivity Pattern.

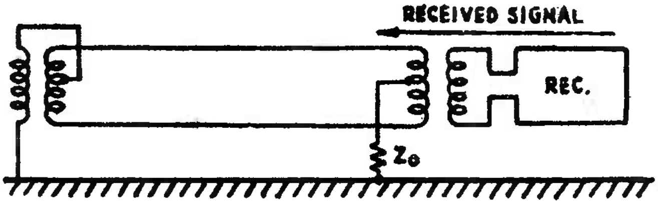

(c) Wiring.

FIG. 17. BEVERAGE OR WAVE AERIAL.

7. MISCELLANEOUS INTERFERENCE.

7.1 External Cross-modulation. Of interest is external cross-modulation, which term is applied to spurious frequencies generated by non-linear or rectifying contacts in ground connection, wires, spouting, etc., in the vicinity of the receiver, that carry currents induced by the signal. When strong radio signals are present, such non-linear contacts develop new frequencies of appreciable magnitude, and these may reach the receiver causing signals to be heard at unexpected places on the dial.

8. TEST QUESTIONS.

1. Outline the principles of diversity reception and what improvement is achieved by its use.

2. What is the purpose of the 3-volt battery shown in Fig. 4?

3. Draw a sketch showing the application of A.G.C. to a receiver comprising 2 radio frequency and 2 intermediate frequency stages. The oscillator and converter need not be shown, and only the essential electrodes of the other valves need be included.

4. Explain the operation and usefulness of the Beverage type aerial.

5. Define "time constant" and briefly indicate its importance in a detector circuit used for providing A.G.C. voltage.

6. What is meant by cross-modulation?

7. (i) List some typical causes of hum in a radio receiver.
   (ii) It is suspected that interference is being introduced via the mains supply, show by means of a sketch how this trouble may be minimised.

END OF PAPER.

COMMONWEALTH OF AUSTRALIA.

Engineering Branch,
Postmaster-General's Department,
Treasury Gardens,
Melbourne, C.2.

COURSE OF TECHNICAL INSTRUCTION.

RADIO II.

PAPER NO. 8.

RADIO RECEIVER PERFORMANCE TESTS.

CONTENTS.

1. INTRODUCTION.

1.1 In order to assess the relative merits of various designs and types of radio receivers, it is necessary to subject these to a series of tests. These tests are chosen so that the more important functions associated with reception and reproduction of the programme or message are thoroughly covered.

The main tests are -

Sensitivity.
Selectivity.
Interference.
Electric Fidelity.
Harmonic Distortion.
Maximum Undistorted Output.
Automatic Gain-control.
Calibration.
Frequency Drift.

There are other tests, of course, but the above will enable the performance of the receiver to be ascertained. The terms will be defined first and then the tests discussed.

Sensitivity, is the ability of a radio receiver to furnish an intelligent audio signal with a specified signal-to-noise ratio, from a low value input signal. It is usually expressed in microvolts of input signal to give a standard output.

Selectivity, is that characteristic of a receiver which determines the extent to which it discriminates between radio signals of different carrier frequencies.

Interference, is the extent to which the receiver output is marred by signals on other frequencies such as image frequency (see later) crosstalk, intermodulation or cross-modulation, etc.

Electric Fidelity, is the faithfulness (or linearity) with which a receiver reproduces at its output, the modulation frequencies present in the radio frequency signal.

Harmonic Distortion, is the magnitude of the spurious audio frequency harmonics introduced in the electric output of the receiver during normal operation. It is usually expressed as a percentage of the fundamental frequency.

Maximum Undistorted Output. This has been arbitrarily expressed as that audio output for which the total harmonic content is not greater than 10 per cent.

Automatic Gain-control. Automatic gain-control is a circuit design which automatically reduces the total amplification of the signal in a radio receiver with increasing strength of the received signal carrier wave. Thus, it tends to keep the output constant with varying input.

Calibration. Calibration is the degree of accuracy with which the frequency or wavelength dial markings are engraved as compared to a precision frequency standard.

Frequency Drift. Frequency drift is a measure of the oscillator frequency stability with time, particularly after first switching on the receiver.

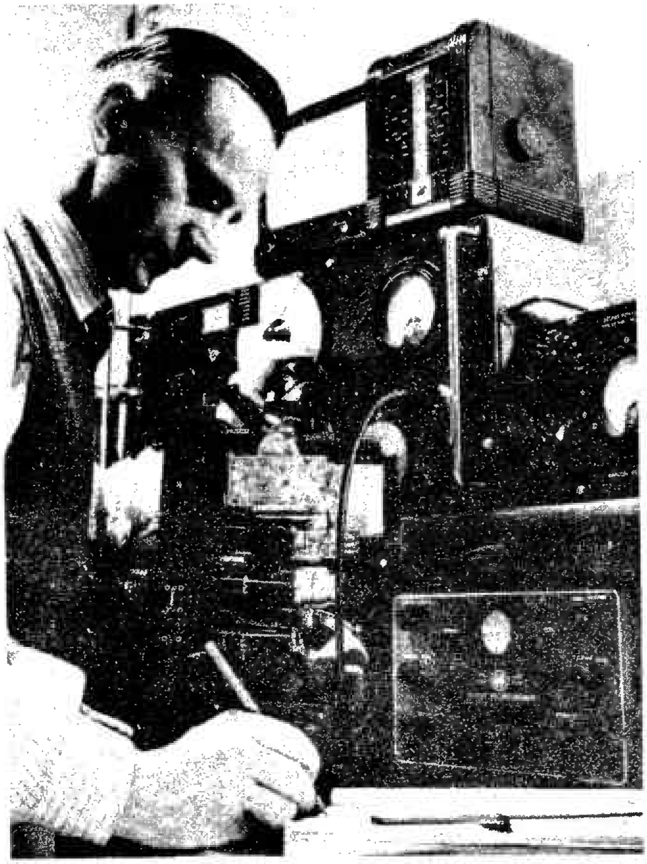

TESTING RECEIVERS (ELECTRONIC INDUSTRIES).

2. INSTRUMENTS USED.

2.1 The instruments required to do these tests are -

Signal generator.
Dummy aerial.
Audio frequency oscillator.
Output power meter.
Noise measuring set.
Distortion measuring set.

Brief descriptions of these instruments are in this Paper.

2.2 Signal Generator. This is the principal measuring instrument and consists of a radio frequency oscillator of the thermionic valve type which is adjustable over the entire frequency range where the receivers under test are expected to operate. This oscillator is provided with means to modulate it to any desired degree at audio frequencies. It usually contains an internal modulation source of 400 c/s with provision for coupling an external source covering a range of about 30 to 16,000 c/s.

Within the signal generator, the output of the modulated radio frequency oscillator is attenuated by an adjustable and calibrated electrical network designed to vary the output voltage level over a wide range.

The desirable qualities of a signal generator are -

(i) Frequency Range. About 300 kc/s to 30 Mc/s (or as otherwise required).

(ii) Accuracy of Calibration of (i). At least 1 per cent, but for selectivity tests should be 0.1 per cent. or better.

(iii) Scale. Good open scale engraved directly in kc/s or Mc/s depending on the particular portion of spectrum in use.

(iv) Voltage Output. Continuously adjustable from 1 µV to 1 volt or more.

(v) Accuracy of Voltage Indication. Higher frequency bands, 20 per cent. Broadcast band within 10 per cent.

(vi) Leakage. Sufficiently low so as not to affect measurements made at the lower output levels (of the order of 1 µV).

(vii) Modulation Oscillator. Frequency accuracy 2 per cent. Harmonic content less than 2 per cent.

(viii) Modulation Level. A suitable indicator should be furnished to enable the depth of modulation to be read directly. The modulation level range should be calculated from 10 per cent. to 100 per cent.

(ix) External Modulation. Provision for externally modulating the carrier wave of signal generator should be made and should have substantially flat response from 30 to 16,000 c/s.

Fig. 1 shows the essential features of a signal generator.

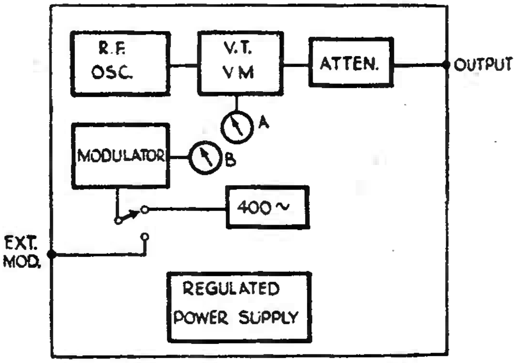

FIG. 1. SIGNAL GENERATOR. (BLOCK SCHEMATIC - SEE FIG. 16 FOR CIRCUIT).

Attenuator. The attenuator should be continuously variable over its entire range. Its impedance, as viewed from the output terminals, should be negligible as compared with the dummy aerial. It should be calibrated in microvolts or in decibel below 1 volt.

/ 2.3

2.3 Dummy Aerial. The dummy aerial represents the average characteristics of a receiving aerial. Fig. 2 shows the standard dummy aerial and Fig. 3 its impedance characteristic.

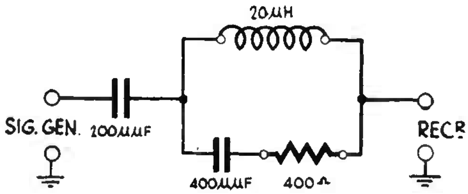

DUMMY AERIAL.

FIG. 2.

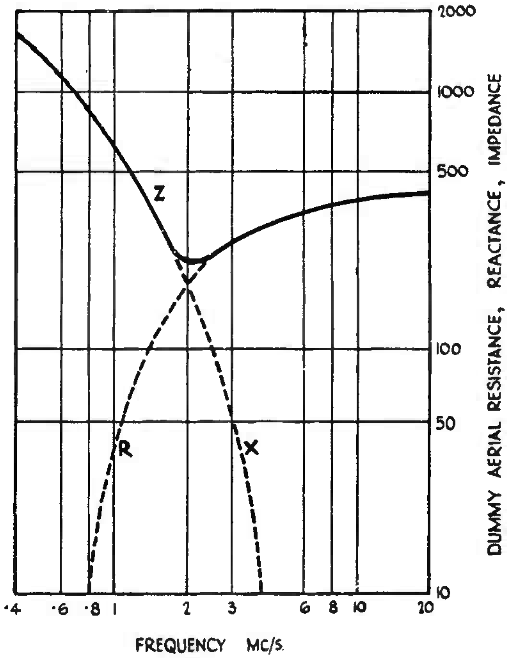

CHARACTERISTICS OF DUMMY AERIAL.

FIG. 3.

2.4 Audio Frequency Oscillator. A standard beat-frequency oscillator, covering the range 30 to 10,000 c/s, is required. It should possess -

(i) Calibration Accuracy. ± 3 c/s below 80 c/s ± 2 per cent. above 80 c/s.
(ii) Output Power. At least 6 mW is 600 ohms.
(iii) Distortion. Less than 1 per cent. from 70 to 10,000 c/s.
(iv) Output Voltage Variation. Not more than ± 1 db over the full range.

2.5 Output Power Meter. An output power meter having adjustable input impedance is desirable and should also have the following characteristics -

(i) Range. 0.1 mW to 10 W or greater.
(ii) Load. Purely resistive.
(iii) Calibration. In mW (or W depending on scale) and db relative to 6 mW in 600 ohms zero level.

Copper-oxide rectifier type voltmeters, thermionic valve voltmeters, or thermo-couple type ammeters are also useful for measuring the power delivered to a dummy load.

2.6 Distortion Measuring Set. The instrument used to measure the total audio frequency distortion generated in a receiver should be capable of indicating the distortion with an accuracy of within 5 per cent. between 0.5 and 30 per cent. of the fundamental. It must not draw sufficient power from the dummy load to modify the magnitude of the distortion being measured.

For making harmonic analyses by the measurement of each harmonic separately, it is desirable to have an instrument with a frequency range of at least 30 to 16,000 c/s.

/ 3.

3. PERFORMANCE TESTS.

3.1 Fig. 4 is a block schematic of a typical set-up for testing receivers. The signal generator is the principal item of equipment, the output measuring devices varying according to availability.

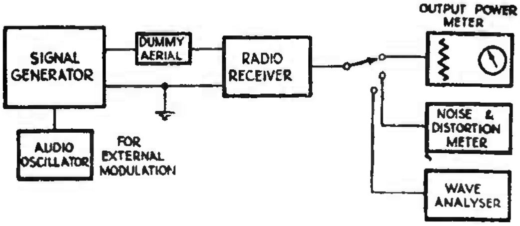

TESTING RECEIVERS.

FIG. 4.

3.2 Sensitivity. Originally, the sensitivity test was applied to determine the least input signal which would give a standard output (50 mW for low-power receivers; 500 mW for others) with controls at maximum gain. It is the practice now to determine the least input which will produce a given signal-to-noise ratio in the receiver output with all controls set for maximum gain. A figure of 15 db has been adopted by the B.P.O. as the minimum signal-to-noise ratio which will result in intelligent speech.

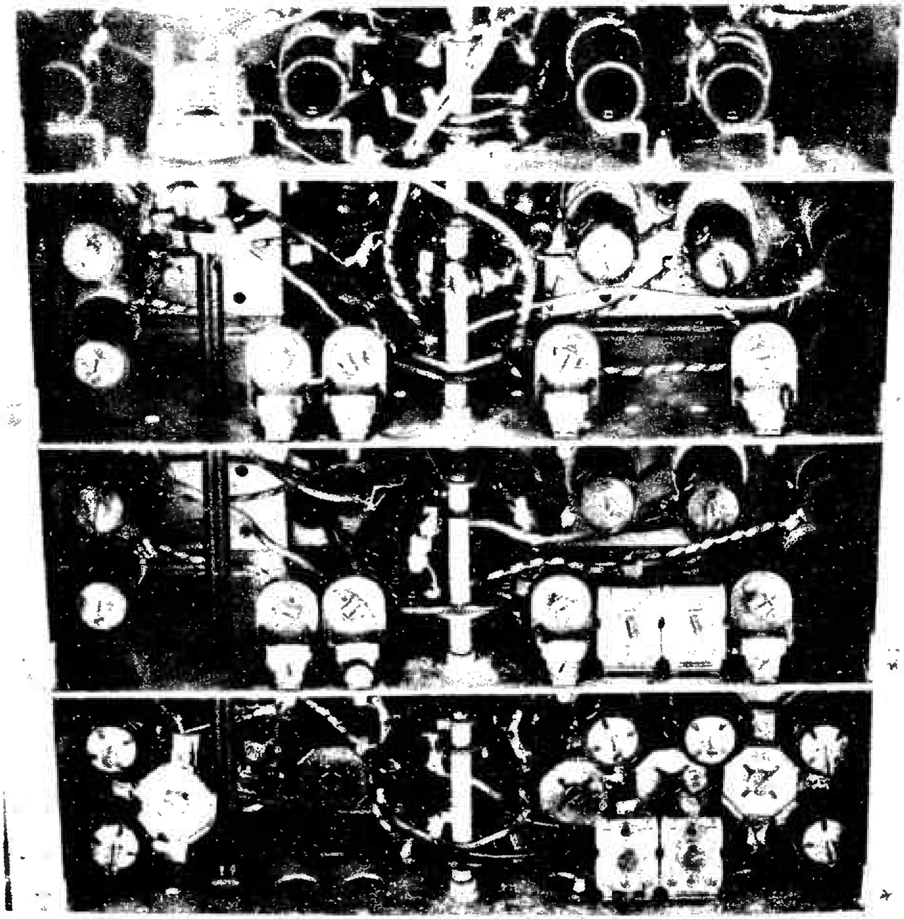

AERIAL, RADIO FREQUENCY, AND OSCILLATOR SECTIONS OF HALLICRAFTER RECEIVER.

Method. With the A.G.C. of the receiver switched off, the signal generator is connected to the receiver through the dummy aerial and set to the desired frequency. (In multi-range receivers, tests are usually made at three frequencies in each band.) This signal generator is modulated 30 per cent. at 400 c/s.

The receiver is tuned to the test frequency and the audio frequency gain control and signal generator attenuator adjusted until the standard output (0.5 W with most modern receivers) is obtained with the desired signal-to-noise ratio. This is observed by noting the output readings with the modulation on and the modulation off. The results should be recorded and graphed. (See Fig. 5.)

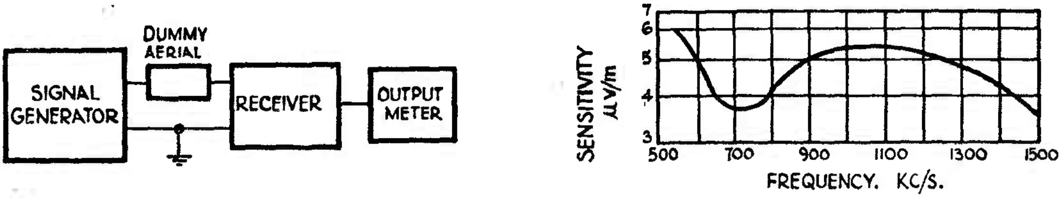

(a) (b)

SENSITIVITY SET-UP AND GRAPH OF MEASUREMENTS.

FIG. 5.

3.3 Selectivity. (See Fig. 6.) Selectivity is expressed in the form of a curve which gives the signal strength required to produce a given receiver output at the resonant frequency and at frequencies above and below resonance, usually in 10 kc/s steps.

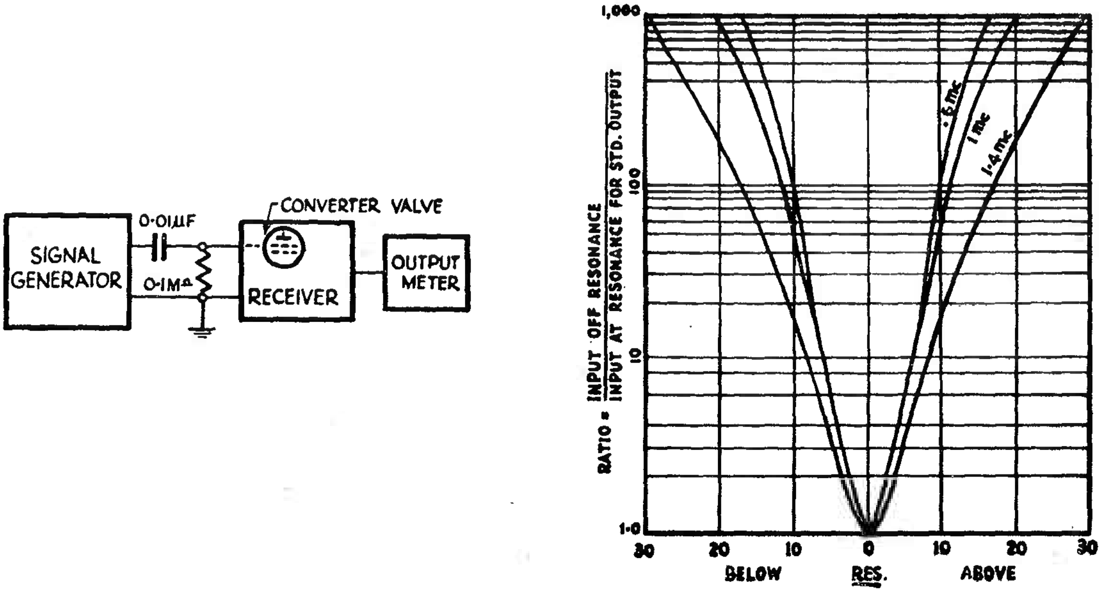

(a) (b)

SELECTIVITY SET-UP AND GRAPH.

FIG. 6.

Method. Switch the A.G.C. off. Set generator to desired frequency. Tune receiver in and adjust to a convenient output with generator modulated 30 per cent. at 400 c/s. The signal generator is then varied by progressively increasing amounts from the frequency to which the receiver is tuned and the signal generator voltage increased as necessary to maintain constant receiver output. Selectivity curves should be carried out to 100 kc/s off resonance or to 80 db above response at resonance whichever is encountered first.

/ Where

Where the intermediate frequency stage incorporates variable selectivity, it is preferable to make this test at the intermediate frequency and also in the case of an all-wave receiver where there may be difficulty in adjusting the signal-generator in the small incremental steps at the higher frequencies.

The results should be recorded and graphed.

3.4 Image Ratio. Tune the receiver and signal generator to desired signal and adjusted for convenient output.

Set the signal generator to the desired signal frequency plus twice the intermediate frequency and adjust for same audio output as before.

The image ratio is then the ratio of the signal generator output at image frequency to the signal generator output at desired frequency.

3.5 Electric Fidelity. (See Fig. 7.) The fidelity of audio response is measured by modulating the signal generator 30 per cent. from an external source and noting the audio frequency output over the modulation frequency range from 30 to 10,000 c/s. The output is usually measured across a resistive load and thus the tests do not represent the performance with a loud-speaker load but are indicative of general performance.

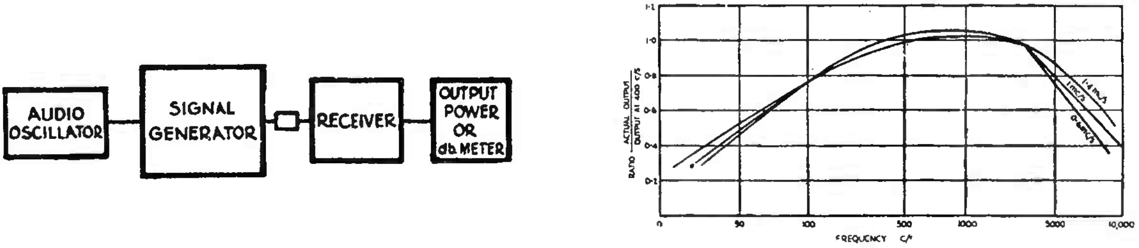

(a)

(b)

FIDELITY SET-UP AND GRAPH.

FIG. 7.

This test should be applied at various selectivity and tone control positions, if tone controls are fitted. The results are plotted on logarithmic paper and the output at 1,000 c/s is usually taken as reference level.

3.6 Harmonic Distortion. No one complete set of conditions can be prescribed for this test, because harmonic distortion depends on so many details of design and operating conditions.

An idea of the distortion introduced during normal operation, however, may be obtained if we consider the receiver as comprising three main sections; radio frequency, detector, audio frequency, and arrange our test so that each section is considered.

Before making these tests, it is convenient first to ascertain the maximum undistorted output, which was defined in paragraph 1.7 at the beginning of this Paper.

(i) Maximum Undistorted Output. Adjust the signal generator (Fig. 8) output to a figure which could be expected not to overload the radio frequency stages, say 1 mV. Then continuously increase the audio frequency output until the total distortion indicated is 10 per cent. (Signal generator modulated 30 per cent. as before.) Note this output value and on succeeding tests do not exceed it. This test could be considered as testing the audio frequency section of receiver.

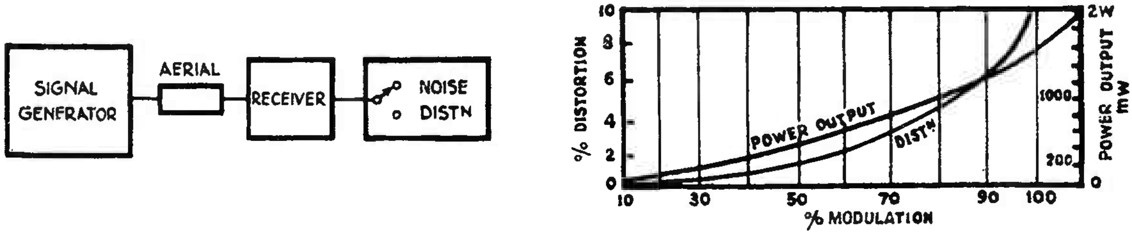

(a)

(b)

FIG. 8. NOISE AND DISTORTION SET-UP AND GRAPH.

(ii) Radio Frequency. With the output chosen, as in previous paragraph, vary the radio frequency input to receiver from about 10 μV to 1 volt in 10 db steps, adjusting the audio output to the same value each time and noting distortion. An increase in distortion over the 10 per cent. obtained previously is probably due to overloading in radio frequency or intermediate frequency circuits. (See Fig. 9.)

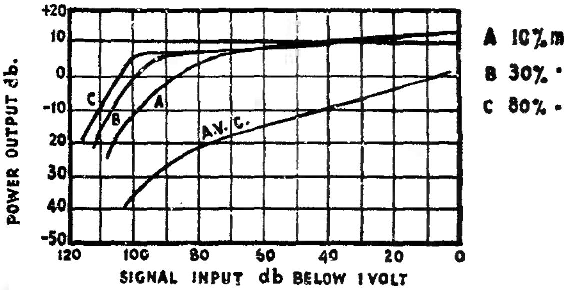

RADIO FREQUENCY DISTORTION.
(A.V.C. GRAPH INCLUDED.)

FIG. 9.

(iii) Detector Linearity. With radio frequency input signal and audio output at values which previous tests have indicated will not overload these stages, vary the modulation depth of signal generator from 10 per cent. to 100 per cent. in 10 per cent. steps.

The audio output should be adjusted each time to give same output and the distortion noted for each percentage modulation value.

These three tests will give a reasonably good indication of the performance of the receiver as far as overloading is concerned.

As a matter of interest signal-to-noise ratios are often read at a number of the above readings, at low and high level radio frequency and audio frequency signal values. It is readily accomplished when using a combined noise and distortion measuring set.

3.7 Automatic Gain-control. This test is to ascertain the operation of automatic volume-control under non-overloading conditions in the audio frequency section. The test is usually made at the middle frequency of each band.

Method. Tune the receiver to the desired signal modulated 30 per cent. at 400 c/s, with the audio frequency gain control adjusted to avoid overloading at any input less than 1 volt. The output is then read as input is varied from 1 μV to 1 volt, and graphed as in Fig. 9.

3.8 Calibration. This test consists of checking the tuning dial calibration against a standard frequency source of high accuracy. A crystal calibrator giving harmonic outputs related to 100 kc/s and 1 Mc/s is very useful for this test. (See Fig. 10.)

FIG. 10. CALIBRATING.

3.9 Frequency Drift. This measurement (Fig. 11) should be made toward the high-frequency end of the tuning band since the drift will be most serious there. A source of frequency of high known accuracy is required.

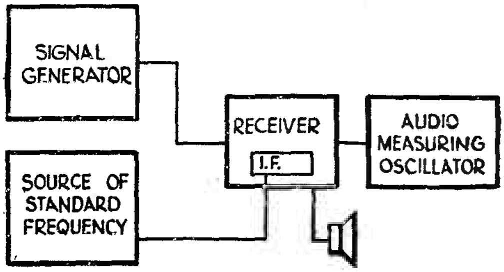

FREQUENCY DRIFT.

FIG. 11.

Method. Allow the receiver to warm up for 5 minutes, initially, then set the tuning control at a high-frequency, say 28 Mc/s.

Inject a signal at the intermediate frequency into the intermediate frequency circuit and measure the resultant beat note on a stable audio frequency oscillator. At the end of an hour measure this beat-frequency again being sure that the audio oscillator is correctly calibrated again.

The difference in the beat note values will indicate the oscillator drift. It may be advisable to measure the drift at intervals of 10 or 15 minutes to obtain a better record.

3.10 Two Signal Cross-modulation Interference Test. It is not always possible to make this test as two signal generators are required. The purpose of the test is to ascertain the interference due to "cross-modulation" described in a previous Paper. The two signal generators are connected to receiver as in Fig. 12a or Fig. 12b.

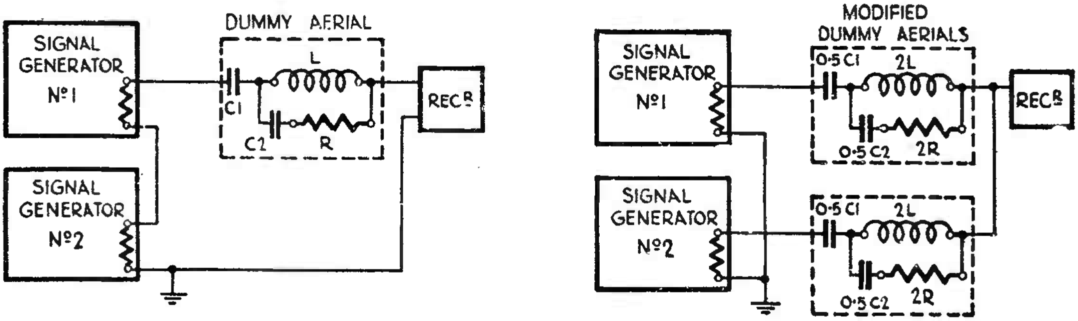

(a) Series Connection.

(b) Parallel Connection.

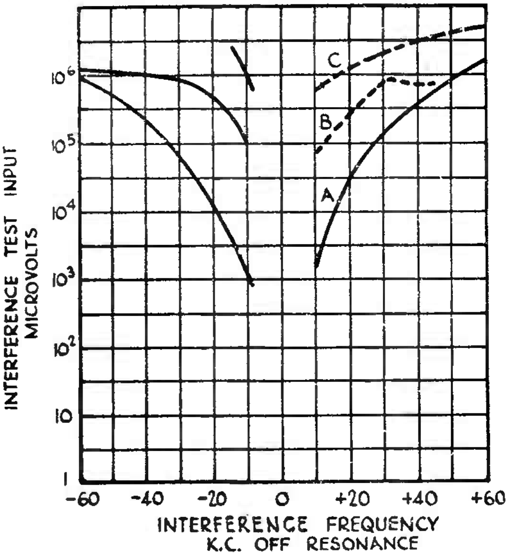

(c)

Curve A = desired signal 50 µV.
Curve B = desired signal 5 µV.
Curve C = desired signal 100 µV.

CROSS-MODULATION INTERFERENCE TEST.

FIG. 12.

Method. The radio receiver is tuned to the desired signal set at one of standard input voltages.

The receiver volume-control is set to give normal test output when the signal is modulated 30 per cent. at 400 c/s after which the modulation is switched off.

An interfering test voltage is then applied to the receiver in addition to the desired signal carrier which remains unchanged. The interfering signal is modulated 30 per cent. at 400 c/s. The interfering test signal is then varied above and below the frequency of the desired signal and the signal generator adjusted to give the normal test output. In most cases ± 10 kc/s steps will be sufficient since station separation (B/C) is normally 10 kc/s. This test is also applied to receivers having A.G.C. which cannot be rendered inoperative.

Records should be kept of all tests carried out on equipment. The records must show the circuit or test arrangement as well as the results of the particular tests and any associated conditions which may reflect on the performance as measured.

Most receiver test results are recorded on suitable graph paper as well as being tabulated.

The scales should be chosen so that the curves will be clear and uncrowded, and readily interpolated.

/ 3.11

3.11 Intermediate Frequency Rejection. The equipment is set up as in the sensitivity test and adjusted to produce standard output at 30 per cent. modulation at three frequencies in each receiver tuning range. After tuning the receiver to a test frequency and adjusting for standard output, the signal generator is tuned to the intermediate frequency and the signal increased until the receiver output is at resonance. The ratio of this input to the input at the receiver's resonant frequency is the intermediate frequency rejection ratio.

3.12 Spurious Responses. Spurious responses are measured by the same method as the intermediate frequency and image rejection ratios, except that the signal generator frequency is varied throughout the frequency range of the receiver, and any responses at frequencies other than the desired or image frequencies were noted and the rejection ratio measured as in 3.11 above. Tests for spurious responses are usually made at two frequencies in each receiver tuning range.

3.13 Aerial Input Impedance. This measurement, if required, is made with a Radio Frequency Bridge, generally with one side of the aerial input circuit earthed. The receiver tuning is adjusted for zero or minimum input reactance, which coincides with or closely approximates resonance of the receiver with the applied signal.

3.14 Cross Signal Distortion Products. This test is made by applying two strong signals having widely different frequencies to the input of the receiver. Any distortion in the radio frequency stages will produce beat-frequencies equal to the sum and difference of the impressed signal frequencies, as well as other combinations. Two unmodulated signal generators are used, tuned to different frequencies, and each have an output of 1 volt. The receiver was tuned to a frequency equal to the sum of the test frequencies, adjusted for CW reception, and the 1,000 c/s A.C. output was noted. Then one signal generator was turned off and the other tuned to this sum frequency. The output was then reduced until the receiver output was equal to that produced by the combination of the two interfering signals. The ratio of this signal to the interfering signals was used as a measure of the discrimination against this type of interference. The same procedure was used to measure the difference frequency signal. This test was applied to all of the receivers, using at least five pairs of frequencies for each receiver. The frequencies were selected to cover the entire tuning range as far as practicable. On receivers provided with selectivity controls, the intermediate frequency bandwidth was adjusted as nearly as possible to 2 kc/s.

3.15 Effect of Power Line Voltage on Frequency. Several procedures for measuring the frequency shift due to line voltage changes were investigated and the following was found to be most satisfactory. The receiver was tuned to resonance with a Frequency Meter and the beat-frequency oscillator adjusted to give a convenient audio frequency beat note. An audio frequency meter was used for visual measurement of the audio beat frequency. The primary power supply voltage was adjusted to exactly 230 volts by means of a variable auto-transformer, and this value was maintained until the receiver became stable, as indicated by the audio frequency meter. When a stable condition was reached, the line voltage was increased abruptly by 10 volts, and the change in beat-frequency was recorded after 15 seconds, 30 seconds, one minute, and each minute thereafter for thirty minutes.

3.16 Aerial Input Balance. This measurement was made by first connecting the receiver to the signal generator and output meter in the same manner as for sensitivity measurements, except that, in place of the 100 ohm resistance between the high potential terminal of the signal generator and the corresponding terminal at the receiver, a 50 ohm resistor was connected between these points, and another 50 ohm resistor was connected between the low potential terminals of the signal generator output and receiver input. The signal level was adjusted to produce an output of 10 mW from the receiver. Then the connection between the 50 ohm resistor and the low potential terminal of the signal generator was removed and this resistor was connected to the high potential terminal of the signal generator, leaving the other end of the resistor connected to the low potential terminal of the receiver. The result of this change was to connect both receiver input terminals to the high potential terminal on the signal generator. The low potential terminal of the signal generator was then connected to the earth terminal of the receiver and the signal level was increased until the receiver was again 10 mW. The ratio of this input, to the input required with the original connection, was used as the balance ratio. It is a measure of the stray signal fed into the receiver by the combined effect of capacity coupling and unbalanced magnetic coupling when the receiver is operated from a balanced transmission line. This measurement was, obviously, made only on receivers provided with a balanced input circuit.

/ 4.

4. ALIGNMENT OF RECEIVERS.

4.1 The actual aligning procedure varies with the different makes and designs of receivers but it consists essentially of the following -

Lining up intermediate frequency circuits.
Lining up oscillator circuits.
Lining up radio frequency and aerial circuits.

4.2 Intermediate Frequency Alignment. Band-pass intermediate frequencies really require a frequency modulated signal generator and a cathode-ray tube to ensure correct band-pass characteristic. The normal procedure, however, will be described. Fig. 13 shows the set-up.

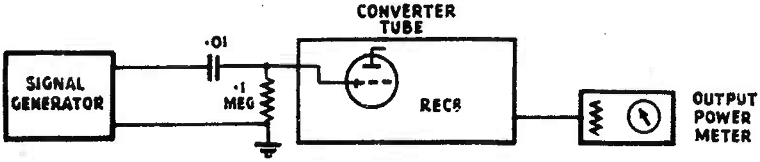

INTERMEDIATE FREQUENCY ALIGNMENT.

FIG. 13.

The alignment of the intermediate frequency system is carried out by working step-by-step backward through the intermediate frequency circuits from the second detector to the first detector and by always applying the test oscillator to the grid immediately preceding the circuit under adjustment and adjusting the trimmers on this circuit for maximum output. In carrying out this process, it is, of course, necessary to reduce the output of the test oscillator each time this output is applied to the grid of a valve at a lower power level. It is usually advisable to connect the signal generator output to the receiver through a condenser of about 0.02 μF. The manufacturers usually recommend the conditions under which alignment should be made if they vary from commonly accepted practice.

The lowest value of signal that will give a reasonable output from the receiver, should always be applied in these tests.

4.3 Oscillator Circuits and Radio Frequency Circuits. Connect the signal generator to the aerial terminals as in the sensitivity tests. If a calibrated dial is furnished, set it at a frequency near the high-end of the band (or the maker's figure, if given). Tune the signal generator to the required frequency and adjust controls for a moderate output at about two-thirds of output meter scale. Thus shunt-trimmer on the oscillator is adjusted for maximum output while rocking the receiver tuning dial slightly in order to take care of any slight interaction between the oscillator and radio frequency stages that may be present.

After this adjust the radio frequency trimmers of the band concerned for maximum output.

Then set the receiver and signal generator to a frequency near the low-frequency end of dial and adjust the oscillator padder condenser for maximum output of receiver.

If the radio frequency circuits are provided with inductance trimmers they should be now adjusted for maximum output.

If any adjustment has been made at either end, it is advisable to re-check the other end again, and repeat the process until no further adjustments are required.

The alignment procedure should be applied to each band of the receiver.

In the case of receivers provided with variable selectivity or a crystal filter in the intermediate frequency, the necessary tests and adjustments required will be indicated by the manufacturers. Since these will vary according to the individual design, no details of adjustments can be given except that they are usually carried out at the intermediate frequency.

/ 5.

5. FAULT LOCATION.

5.1 Only the broad principles of fault location will be referred to in these notes, since it is unlikely that questions will require more than this and a knowledge of the types of instruments which are most useful.

5.2 Instruments. The signal generator, output meter, noise and distortion meter have already been referred to, but there are two other very useful instruments.

(i) Thermionic valve voltmeter.
(ii) High-resistance D.C./A.C. volt-ohmmeter.

5.3 Thermionic Valve Voltmeter. The thermionic valve voltmeter is essentially a thermionic valve detector in which the rectified D.C. current is used as an indication of the applied alternating voltage. The thermionic valve voltmeter is the standard instrument for the accurate measurement of voltages at audio and radio frequencies. When properly made, it can be calibrated at 50 c/s and used up to extremely high-frequencies without any frequency correction. The energy consumption is small in any case, and can be made substantially zero when desired. A widely used type of thermionic valve voltmeter employing a triode valve as a plate rectifier is shown in Fig. 14a. The variable resistor R is used to balance out the normal plate current for zero setting of the meter.

An improved circuit is shown in Fig. 14b, the improvement being the addition of the diode valve V2, which may be fitted at the end of a short cable. This enables measurements to be made in positions where the length of leads to the thermionic valve voltmeter would introduce serious errors particularly at radio frequencies.

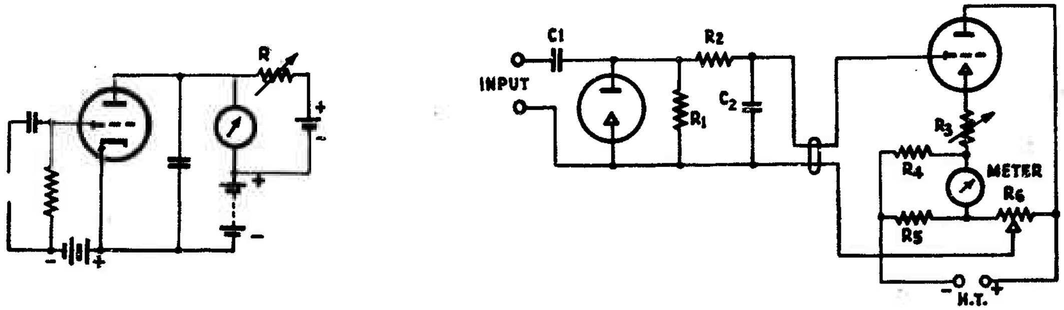

(a) Early Type. (b) Later Type.

VALVE VOLTMETER.

FIG. 14.

5.4 Volt Ohmmeter. This is a multi-range instrument and should read up to about 500 volts A.C./D.C., and to about 1 ampere. The voltmeter should have a resistance of at least 20,000 ohms per volt to enable readings to be made with reasonable accuracy in high-resistance circuits. Suitable scales are as follows -

Volts.		Current.	
A.C.	D.C.	A.C.	D.C.
5	1	0-1 mA	0-1 mA
50	10	0-100 mA	0-10 mA
100	50	0-500 mA	0-50 mA
250	100	0-2 A	0-100 mA
500	250	-	0-250 mA
-	500	-	0-1 A

/ Fig. 15.

Fig. 15 shows a typical superheterodyne divided into functional sections. The five general sections are -

(i) Signal selectivity circuits.
(ii) Oscillator sections.
(iii) Intermediate frequency and 2nd detector.
(iv) Audio amplifier and output stages.
(v) Power supply and filter system.

For sections (i) to (iii) the signal generator and thermionic valve voltmeter are a useful combination. For section (iv) an audio frequency oscillator and thermionic valve voltmeter or other type of audio power meter will be suitable. For section (v) the volt-ohmmeter enables quick checks, and should be used for checking socket voltages of the other stages in preliminary checking of faulty condition.

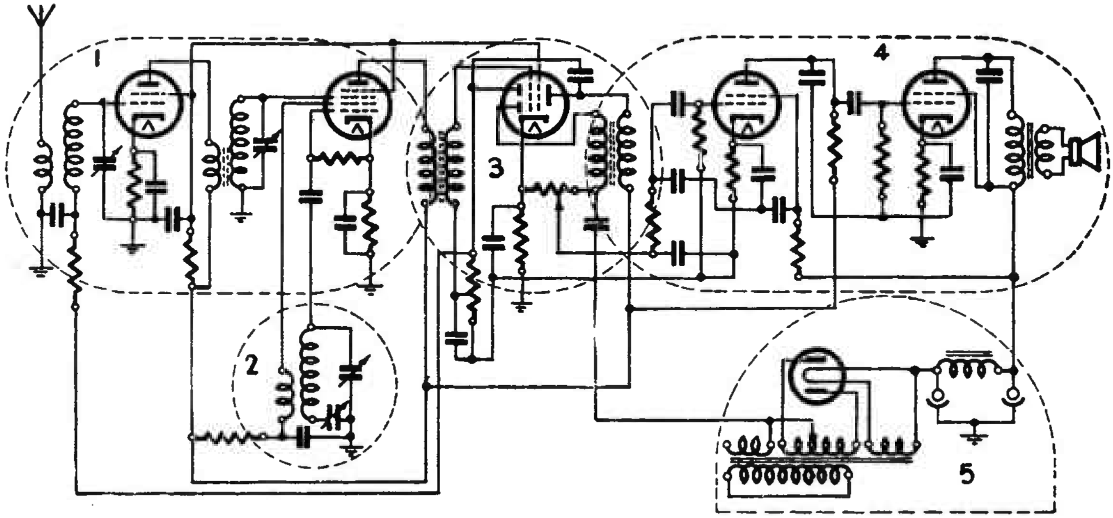

TYPICAL SUPERHETERODYNE RADIO RECEIVER.

1. Signal circuit,
2. Oscillator,
3. Intermediate frequency circuit,
4. Audio, and
5. Power.

FIG. 15.

5.5 Faulty conditions may be summarised under four general headings.

(i) Complete lack of signals.
(ii) Lack of volume.
(iii) Distortion.
(iv) Crackles and whistles.

It is usually advisable to check all valves of a receiver for emission before proceeding with a more detailed analysis.

Typical causes of the fault conditions mentioned above are shown as a matter of interest below.

It is usually a good plan, however, to check the main H.T. points for voltage before commencing other tests.

/ (i)

(i) Absence of Signals.

Burnt out rectifier valve.
Broken down filter condensers.
Open-circuit field winding or filter choke.
Short-circuit in H.T. by-pass condensers.
Open-circuit cathode resistors.
H.T. supply line open-circuited.
Open-circuit in radio frequency or intermediate frequency coils.
Shield cans shorting to grids.
Open grid resistors, etc.

A short circuit in H.T. supply circuit (filters, by-pass condensers, etc.) is usually indicated by the plates of rectifier becoming red hot. Open in output primary circuit, if pentode is used, shows up by a red hot screen grid of pentode; open and the secondary side is sometimes indicated by a faint rattle of the output transformer laminations when the set is tuned to a station.

Oscillator may be roughly checked by touching the oscillator grid with a screwdriver, if O.K. a slight click will be heard in the speaker as the blade makes contact with the grid terminal. Touching the grid cap of an audio valve with the grid clip removed will result in a howl if the set is "alive".

(ii) Lack of Volume.

Weak valves.
Low H.T. or filament voltage.
Misalignment of tuned circuits.
Open-circuit radio frequency or intermediate frequency coils.
Faulty gain-controls.
Open-circuit audio amplifier section.

Open circuits generally have to be traced by point to point checking with an ohmmeter or similar continuity meter.

(iii) Distortion.

The main excuses of distortion which may occur at radio frequency or audio frequency may be summarised as under -

Open-circuited bias or grid resistors.
Oscillator in radio or intermediate frequency stages.
Audio feedback.
Low emission valves.
Incorrect voltages.
Leaky coupling condensers.

(iv) Common Causes of Crackles and Whistles.

Crackles -

Fault resistors.
Faulty condensers.
Loose contacts at sockets.
Dry soldered joints.
Leaky audio or output transformer windings.
Faulty power transformer.
Outside electrical interference.
Interference coming through the power line.

Check whether noise is coming externally by disconnecting aerial and earth and short-circuiting terminals of set.

If still present, short-circuit each grid to chassis in turn until trouble disappears. Should the noise disappear, examine the resistors and condensers associated with the circuit immediately preceding the valve concerned.

Whistles -

Incorrect alignment of intermediate frequency and radio frequency stages.
Instability caused by lack of shielding and poor wiring arrangement.
Unstable valves.

Should the instability be present after checking and aligning the receiver, it may be minimised by inserting stopping resistors in the "B" supply lines to radio frequency and intermediate frequency stages (1,000-3,000 ohms value).

Another type is encountered where turning up the volume control causes a succession of howls and whistles. This trouble is probably due to poor layout and too high a gain in mixer and intermediate frequency stages. Suppression resistors in the plate circuits of the mixer and intermediate frequency valves and in the grid circuits of audio valves will often remedy this trouble.

It will be realised that the above is necessarily a brief outline of fault location, but it should serve to illustrate the principles.

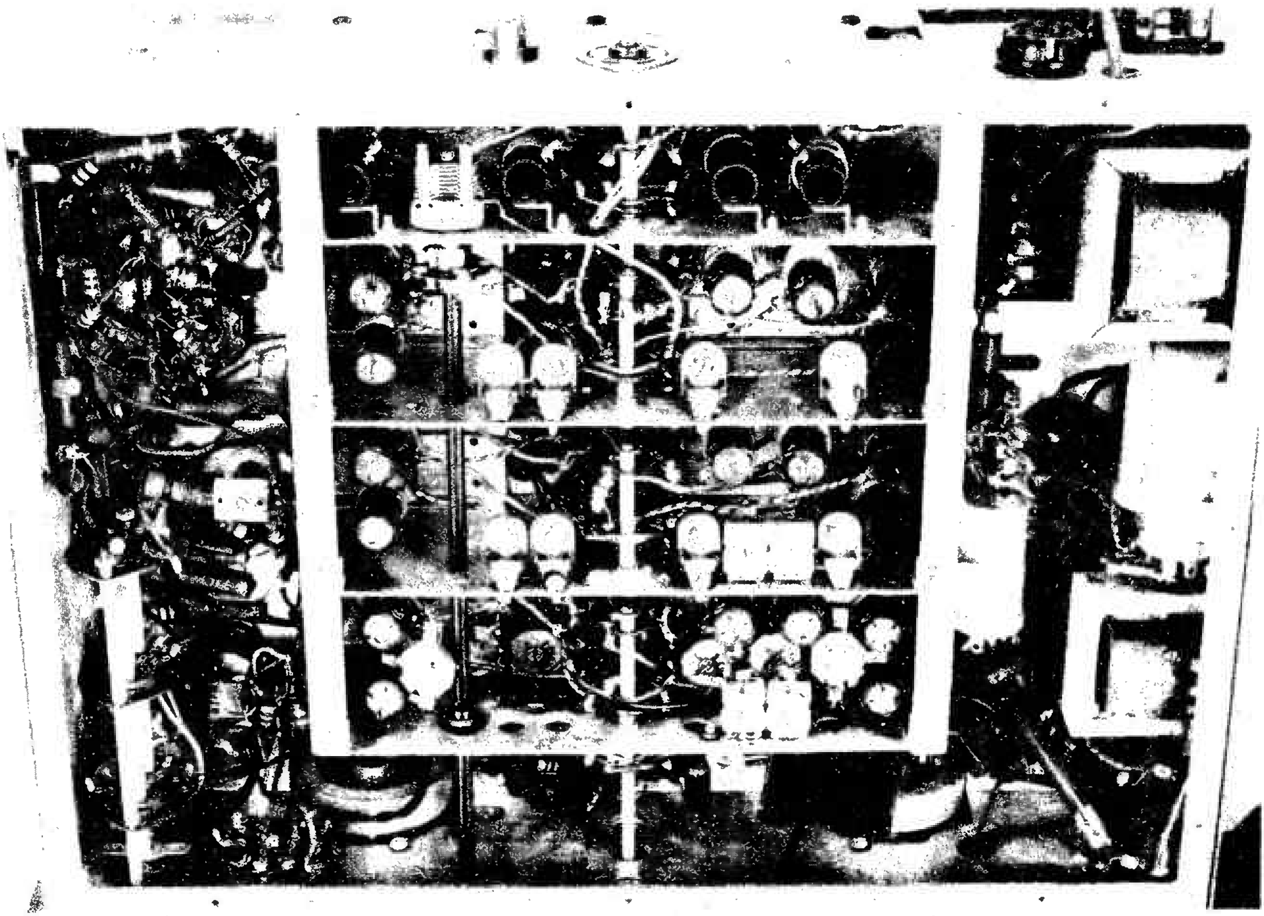

UNDER-CHASSIS VIEW OF COMMUNICATION RECEIVER SHOWING A TENDENCY TO CROWD COMPONENTS.

6. INSTRUMENTS FOR FAULT LOCATION.

6.1 A more detailed description of some of the instruments used in these tests on radio receivers seems appropriate here. Those described will be -

Signal Generator.
Wave Analyser.
Audio Frequency Oscillator.
Noise and Distortion Meter.
Power Output Meter.
D.C. Thermionic Valve Voltmeter.

6.2 Signal Generator. Paragraph 2.2 listed the desirable characteristics of a signal generator and Fig. 1 is a block schematic of a typical unit. Fig. 16 shows in elementary form the circuit of a typical signal generator of a type suitable for operation to about 60 Mc/s.

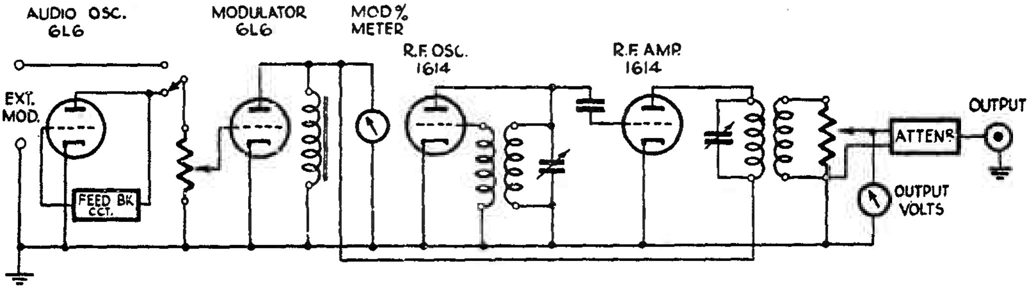

OUTLINE CIRCUIT OF A TYPICAL SIGNAL GENERATOR.

FIG. 16.

The above sketch shows very simply the essential circuits of a signal generator. Also included but not shown, are a voltage regulated power supply, attenuator, thermionic valve voltmeter circuits for meter (output voltage) decoupling and by-passing circuits, etc. Anode modulation is employed thus ensuring high-quality modulation over the entire range of the instrument. Many precautions are taken to obtain a high degree of accuracy of frequency calibration, and output voltage values, also to minimise frequency drift, leakage, etc.

6.3 Wave Analyser. A wave analyser is an instrument for measuring the amplitude and frequency of the components of a complex wave form, such as might be encountered in audio frequency equipment, radio transmitters and receivers, public address systems, broadcast programmes equipment, etc. This instrument usually consists of a heterodyne type of thermionic valve voltmeter. The signal to be measured is amplified and then applied to a balanced modulator, together with the output of a local oscillator. Following this is a "flat top" crystal filter, an amplifier and output meter. The filter is designed for 50 kc/s pass frequency of about 4 c/s band-width, and this signal is obtained from the modulator output by suitable tuned circuits. The local oscillator is so designed that the sum of the local oscillator and the signal or component of signal being measured is always 50 kc/s.

In use the signal to be measured is fed to the input circuit and the analyser tuned to the fundamental signal frequency, say 1,000 c/s. The output control is adjusted for a convenient reading on output meter, say 100 units. The analyser is then tuned successively to 2,000 c/s (2nd harmonic) 3,000 c/s (3rd harmonic) 4,000 c/s, and so on, to the highest harmonic it is desired to measure. The output is noted for each frequency and if the fundamental reading was 100, the successive readings will indicate the percentage of the particular harmonic that is contained in the complex wave. For example, if fundamental was 1,000 c/s and gave a reading of 100, then a value of 33 for 2,000 c/s, would indicate 33 per cent. second harmonic, etc.

/ Fig. 17

Fig. 17 shows, in elementary form, the main circuits of a typical wave analyser, the input being suitable for a complex wave having components between 0 and 16,000 c/s.

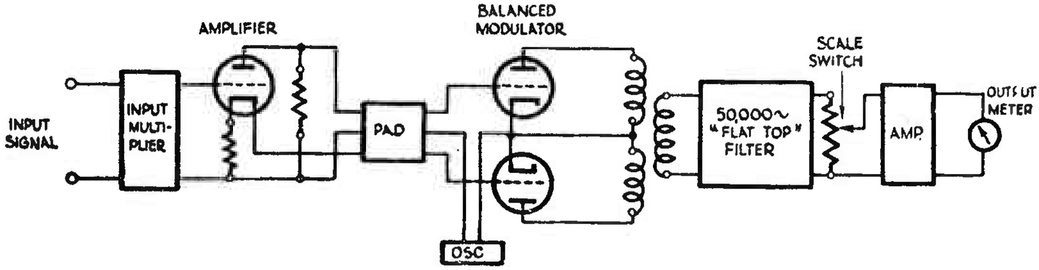

ELEMENTARY WAVE ANALYSER CIRCUIT.

FIG. 17.

6.4 Audio Frequency Oscillator or Beat-Frequency Oscillator. This oscillator usually has an audio frequency range of 0 to 30 kc/s and an output of the order of 5-10 volts and is suitable for taking selectivity curves on tuned circuits over a wide range of frequencies, for measuring the transmission characteristics of filters, for supplying the modulating frequencies for signal generators, etc.

It consists of a fixed oscillator and a variable oscillator operating at high-frequencies. These oscillators feed a detector from the output circuit of which the difference frequency is selected. The detector is followed by a low-pass filter and a two-stage wide band amplifier. The two oscillator outputs are isolated by a buffer amplifier and an automatic volume-control circuit maintains the output voltage constant with frequency. A thermionic valve voltmeter is used to measure the output voltage. A typical circuit is shown in Fig. 18.

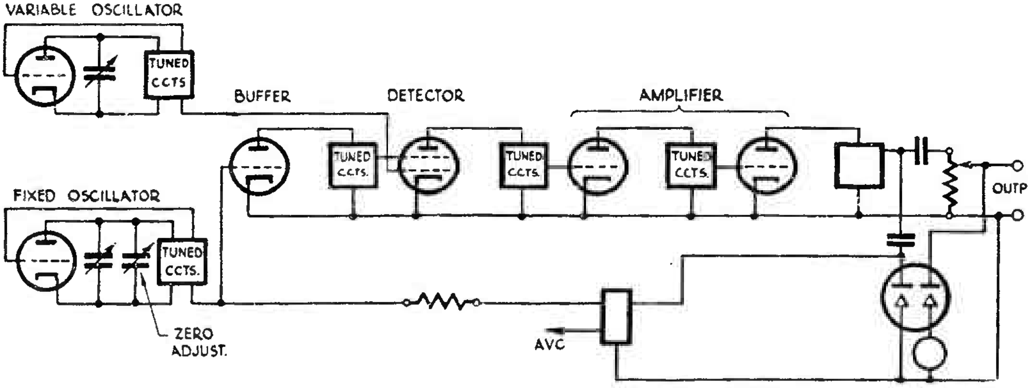

ELEMENTARY BEAT-FREQUENCY OSCILLATOR. (APPROXIMATELY 0-30 kc/s.)

FIG. 18.

6.5 Noise and Distortion Meter. This meter is intended for use in radio broadcasting stations, receiving stations and laboratories where it is desired to measure audio frequency distortion, noise and hum level, A.G.C. characteristics, etc.

It consists of a linear rectifier, a filter, an amplifier and a thermionic valve voltmeter. The meter reads distortion directly in per cent. of fundamental voltage, and carrier noise level or hum level directly in db with respect to normal transmitter input or receiver output. Fig. 19 shows a typical instrument diagram. In use, the signal (receiver output), is fed into the audio input terminals to a shielded balanced transformer, the secondary of which is connected directly to a noise level multiplier bank, and through a 400 c/s high-pass filter to the distortion measuring network.

The receiver modulation must be 400 c/s ± 20 c/s for distortion measurements, but noise may be measured from 30 to 20,000 c/s.

/ Distortion

Distortion Measurements. The 400 c/s audio signal from receiver is fed into audio frequency terminals and the high-pass filter blocks the 400 c/s fundamental, but the harmonic frequencies pass on to the amplifier and output meter. The amplifier is adjusted, with switch in "CAL" position, to give a certain reading on output meter, the switch is then moved to the "distortion measuring" position and distortion read directly on distortion scale.

Noise Measurements. Proceed as above, but after setting scale to given reading, switch signal generator modulation off, and then move switch to "noise measuring" position, where the noise in db below signal level is read directly in db. This is the signal-to-noise ratio of the receiver at the tuning frequency. Fig. 19 is a general schematic circuit of a noise and distortion meter.

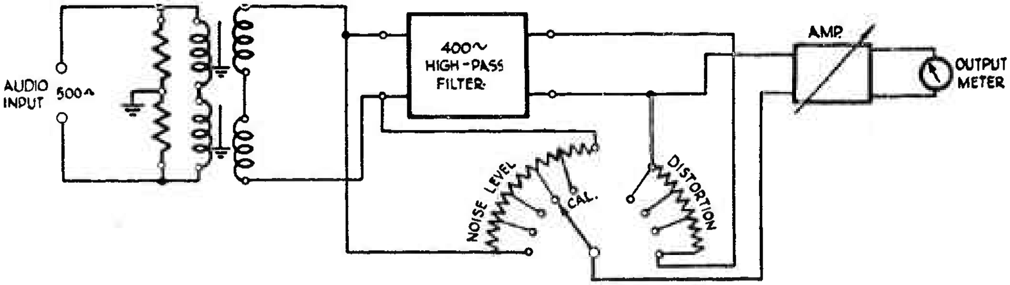

BASIC CIRCUIT OF NOISE PER DISTORTION METER.

FIG. 19.

There are a few disadvantages of this instrument -

(i) Total harmonic distortion is given, not individual harmonic values.
(ii) Noise and hum are measured together, unless a 50/60 c/s filter is employed.
(iii) Suitable for 400 c/s modulation frequency only on distortion measurements.

But the advantages of speed and convenience often outweigh these disadvantages.

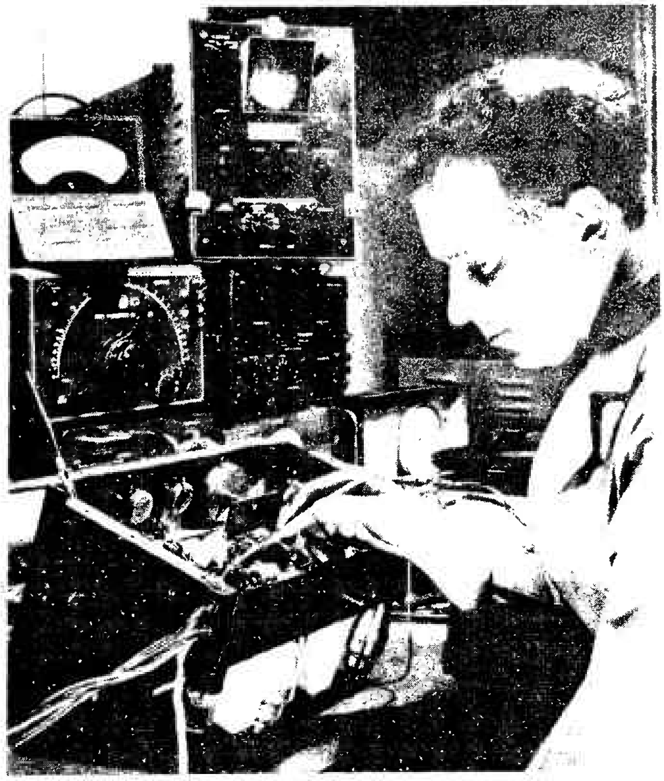

TESTING RADIO RECEIVER.

6.6 Output Power Meter. This instrument is suitable for power output and internal impedance measurements on radio receivers, amplifiers, oscillators, etc. Power outputs up to 100 W may be measured, and an auxiliary db scale is provided on the meter to facilitate comparison measurements such as frequency response. A typical circuit is shown in Fig. 20, and it will be seen from the diagram that the instrument is equivalent to an adjustable load impedance, across which is connected a voltmeter calibrated directly in watts dissipated in the load. The impedance range of a typical instrument may be from 2.5 to 20,000 ohms, reasonably accurate to about 12 kc/s. Decibel ranges average from -10 to +40 db referred to 1 mW.

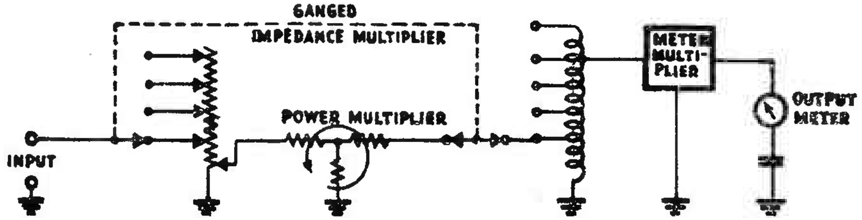

TYPICAL POWER OUTPUT METER.

FIG. 20.

6.7 Thermionic Valve Voltmeter for D.C. In addition to the thermionic valve voltmeter described in Paragraph 5.3 a similar instrument for measuring D.C. voltages to several thousand volts has been developed.

The advantages of this type of meter is that no power is drawn from the circuit under test and hence the indicated voltage is the actual circuit voltage.

Fig. 21 is a schematic diagram of the typical thermionic valve voltmeter for measuring D.C. voltages. This meter measures from 0.05 volt to 3,000 volts. The input resistance to 30 volts is over 5,000 MΩ, and over 30 volts is 1,000 MΩ. It is thus particularly suitable for measuring small valve bias potentials, automatic gain-control voltages, cathode-ray potentials, and the various potentials in radio transmitters, frequency modulated and amplitude modulated receivers, etc.

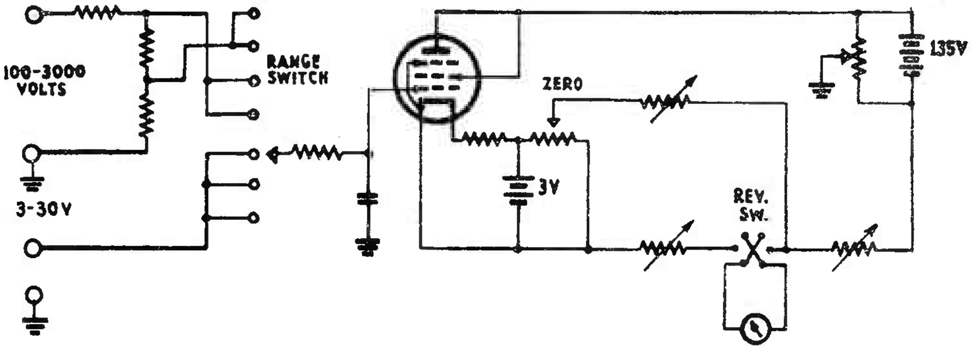

D.C. THERMIONIC VALVE VOLTMETER.

FIG. 21.

7. TEST QUESTIONS.

1. Give a block schematic diagram of a superheterodyne type of radio receiver, dividing it into functional sections to illustrate systematic fault location.

2. What instruments are required to carry out detailed performance tests on a communication type radio receiver, having good quality and incorporating automatic gain-control?

3. In what order is the alignment of a multi-band radio receiver carried out?

4. Name five important tests which should be applied to determine the performance of a radio receiver. Describe and illustrate the method of carrying out one of the tests mentioned.

5. Briefly define the following terms as associated with this Paper -

(i) Sensitivity.
(ii) Fidelity.
(iii) Signal-to-Noise Ratio.
(iv) Selectivity.
(v) Image Ratio.

END OF PAPER.

COMMONWEALTH OF AUSTRALIA.

Chief Engineer's Branch,
Postmaster-General's Department,
Treasury Gardens,
Melbourne, C.2.

COURSE OF TECHNICAL INSTRUCTION.

POWER SUPPLIES FOR RADIO.

CONTENTS.

---

1. INTRODUCTION.

1.1 Power for operating radio equipment may be obtained from two main sources -

(i) Battery (storage and dry cell), and

(ii) Commercial supply systems.

Batteries, as a source of supply of power, are dealt with in other books in the Course of Technical Instruction, and will not be discussed in these notes.

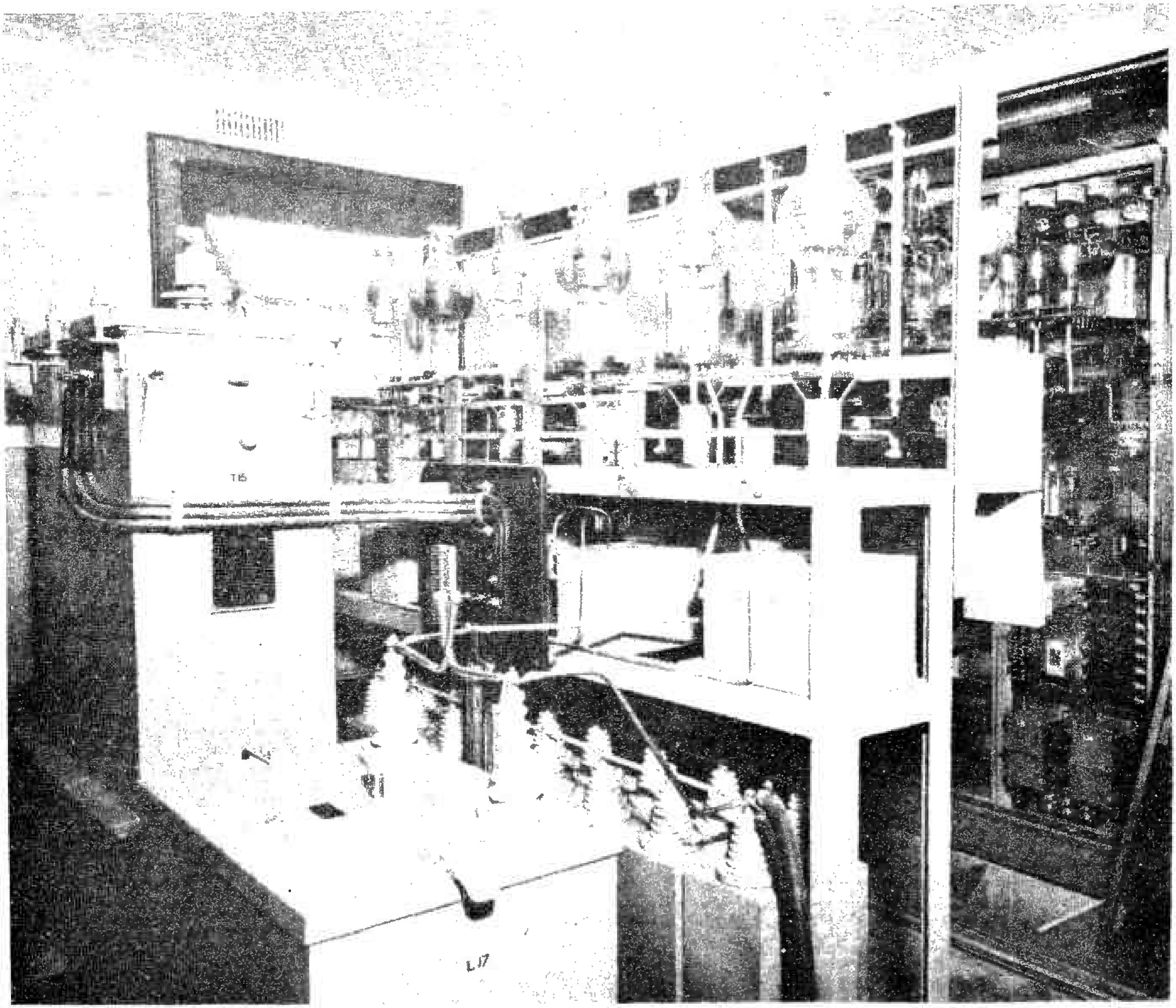

HIGH TENSION RECTIFIER.
10 kW AT THE SHORTWAVE TRANSMITTER, VLG.

The universal use of A.C. in the transmission and distribution of electric power necessitates the use of some means for converting the commercial power supplies available into D.C. Although this may be accomplished by rotary converters or motor-generator sets, it is generally more economical and efficient to use electronic rectifiers. Other advantages of electronic rectifiers include quiet operation and ease and speed of starting. Since the output of a rectifier is pulsating, and the voltage used in most valve circuits must be nearly free of pulsation, rectifiers which supply direct voltages to valves must be followed by smoothing filters.

Some essential definitions will be given as an introduction to details of radio power circuits.

2. DEFINITIONS.

2.1 Rectifier. A rectifier is a device having an asymmetrical conductive characteristic which is used for the conversion of A.C. into D.C. Such devices include thermionic valve rectifiers, gaseous rectifiers, metal (copper oxide or selenium) rectifiers and electrolytic rectifiers.

2.2 Half-Wave Rectifier. A half-wave rectifier is one which utilises only one-half of each cycle when changing A.C. into pulsating current.

2.3 Full-Wave Rectifier. A full-wave rectifier is a double element rectifier arranged to make each half-cycle contribute to the load circuit in the same direction. One element functions during one half-cycle, and the other during the next half-cycle.

2.4 Ripple Voltage. This is the alternating component of the rectified unidirectional current from a rectifier. It may be regarded as a small A.C. superimposed upon a steady unidirectional current. It is the object of the smoothing filter to "iron out" this ripple, since it would cause hum in the circuits associated with the rectifier.

/ 3.

3. RECTIFIERS.

3.1 Rectifiers are mostly used to provide anode power supplies to radio receivers and transmitters. Most rectifiers used for anode power supply systems are either high-vacuum diodes or mercury-vapour hot cathode types. In addition, mercury-arc and ignition rectifiers are sometimes used for high-power, and the metal types for developing comparatively small amounts of power. Rectifiers using metal rectifiers are covered in other books of this series but pictures of these rectifiers are included in this Paper.

3.2 High-Vacuum Rectifiers. The high-vacuum thermionic rectifier is a diode valve consisting of cathode and anode electrodes. The rectifying action results from the fact that when the anode is positive with respect to the cathode, electrons flow to the anode, while, if the anode is negative, the valve becomes non-conducting.

The important characteristics of a high-vacuum diode are -

(i) Allowable Peak and Average Currents. The maximum allowable peak anode current is the safe value of peak current which the valve can handle under continuous operating conditions over the useful life of the valve. Normally, it is governed by the cathode emission permissible with a given diode.

The allowable average current represents the D.C. output current which can be continuously carried without overheating the valve. As the D.C. flows for only half the time the valve is in operation, the average anode current should never exceed one-half of the peak current.

(ii) Maximum Peak Inverse Voltage. This is the largest negative voltage which may be applied to the anode in safety, that is, when the valve is non-conducting, and determines the D.C. voltage which can be obtained from the rectifier valve. (See also paragraph 3.4.)

(iii) Voltage Drop in Diode. The voltage drop is an important factor in determining the voltage regulation of the rectifier filter system, and also fixes the amount of anode dissipation to be provided in the valve design. The voltage drop is determined by the current, the cathode area and the cathode-anode spacing.

High-vacuum rectifiers are used almost to the exclusion of other types for developing D.C. output voltages to about 500 V at currents up to about 200 mA.

/ Advantages

Advantages - Robust.

Current increases smoothly with voltage, hence no radio frequency transients are produced. In low voltage types, close anode-cathode spacing gives a very low voltage drop (10-20 V).

Disadvantages - High voltage rectifiers give voltage drops and, consequently, power loss greater than the mercury-vapour type.

3.3 Mercury-Vapour - Hot Cathode-Diodes. Mercury-vapour gas at low pressure is introduced into the valve used in this rectifier. The presence of this gas entirely changes the theoretical operation of the valve.

When the anode of such a valve is positive, the mercury-vapour is ionised by collision with the electrons, producing positive ions which neutralise the space charge of the electrons emitted from the cathode. The cloud of positive ions, which are thousands of times heavier than electrons and, therefore, slower in their movements, has the same effect as would a grid surrounding the cathode and maintained at a suitable positive potential. The discharge is of the nature of an arc. The voltage drop is only that required to produce ionisation, about 10-20 V, even when the anode-cathode spacing is large. If, however, an attempt is made to draw a current greater than the total cathode emission, the voltage drop increases and the cathode is bombarded with high-velocity positive ions. This may cause permanent damage to the cathode surface.

The important characteristics of this valve are those given for the alternative type.

Advantages. High voltage types have a lower voltage drop and hence the higher efficiency than any other type of high-voltage rectifier.

Disadvantages. Sudden rise of current when the arc strikes, causes radio frequency transients which may cause interference in radio receiver circuits (not troublesome in transmitter use).

The filament voltage must be carefully maintained at the rated value in order that the full emission may always be available; on starting equipment time must be allowed for the cathode to reach its operating temperature. With some large valves having indirectly heated cathodes, as long as half an hour may be necessary for this purpose. Valve manufacturers always state the time necessary for each type. Protection against even momentary

/ Selenium

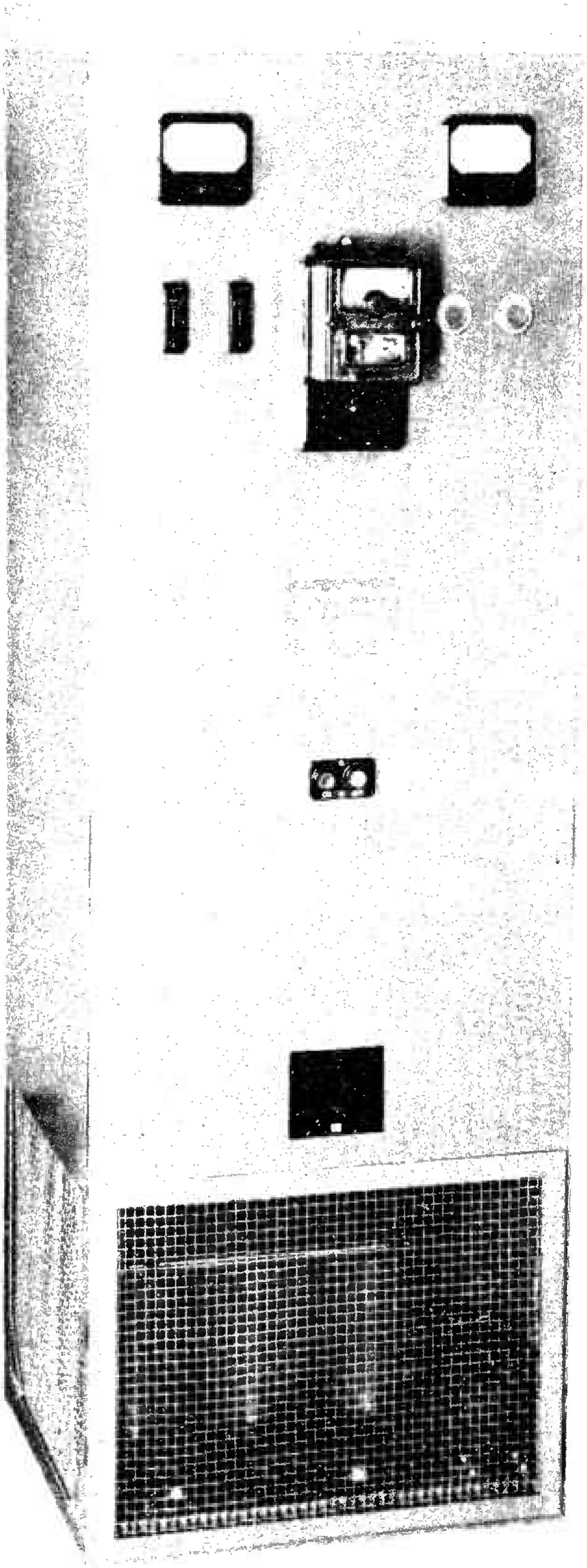

SELENIUM RECTIFIER BATTERY CHARGING EQUIPMENT.

Two Rate Type with automatic reduction of current at predetermined voltage per cell, and automatic final cut-off after predetermined interval under control of synchronous motor sequence switch.

FRONT VIEW.

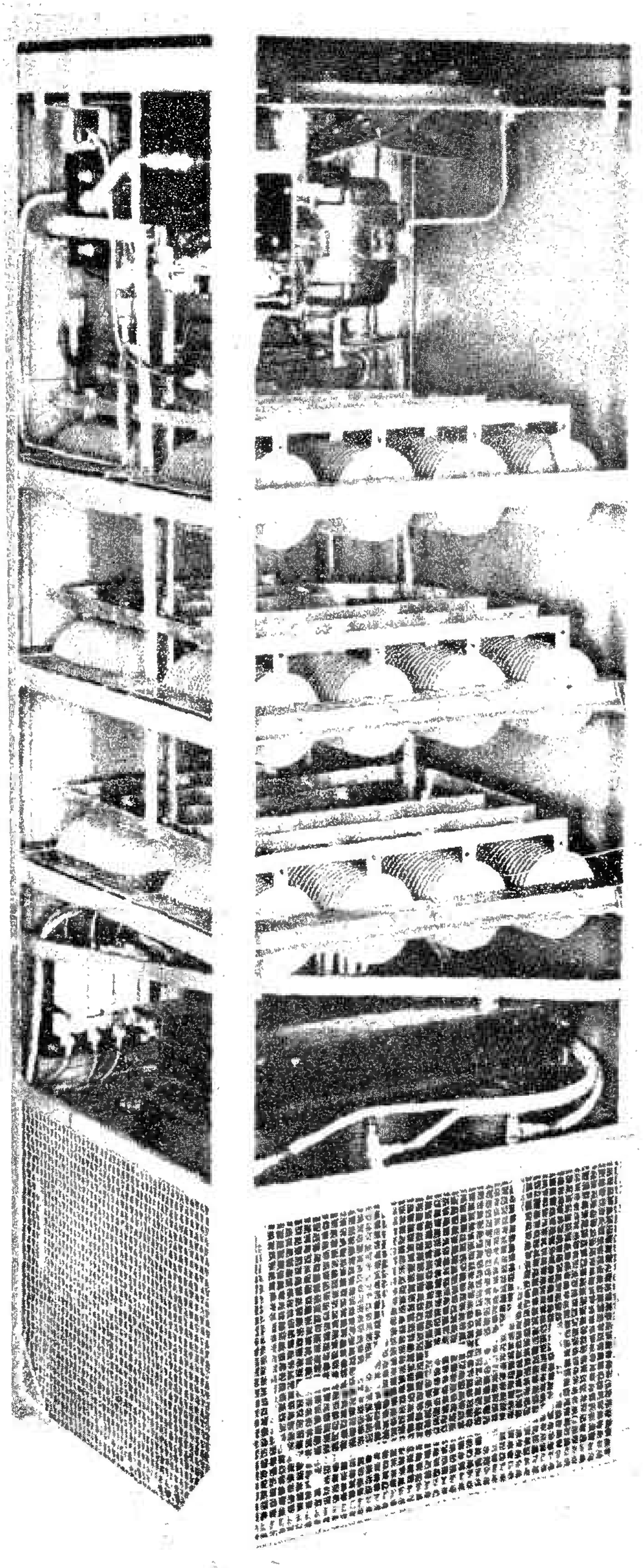

SELENIUM RECTIFIER BATTERY CHARGING EQUIPMENT.

REAR VIEW.

short circuits is necessary. The temperature of the bulb is also somewhat critical, as this controls the pressure of the mercury-vapour. To avoid too high a pressure, it is sufficient to cool one spot near the base of the valve, usually by a stream of air from a small nozzle; the mercury will then condense at this spot.

3.4 Inverse Peak Voltage. In order to clarify the reference to inverse peak voltage, consider Fig. 1 which is a single-phase full-wave rectifier. When valve V1 is conducting the full secondary voltage minus the drop in V1 is applied to V2. As this is during the non-conducting alternation as far as V2 is concerned, it is the inverse of the alternation during which the valve operates as a conductor of current. Hence the term "inverse peak voltage".

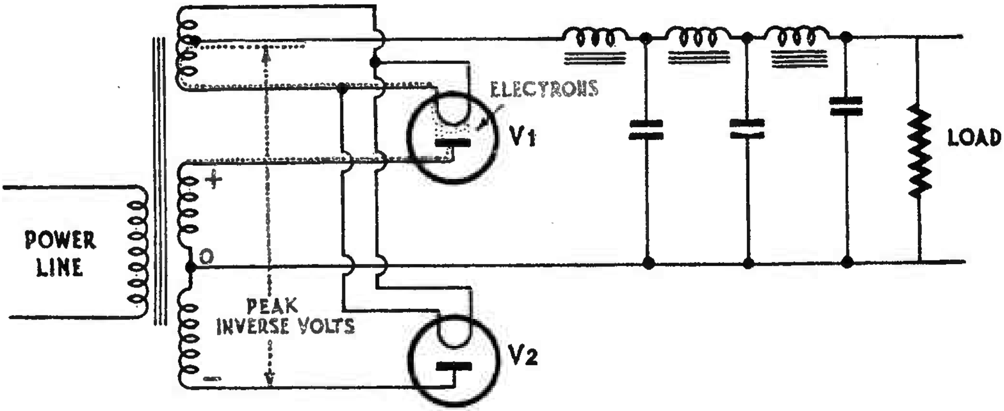

INVERSE PEAK VOLTAGE.

FIG. 1.

If the maximum inverse peak voltage of a high-vacuum valve is exceeded, the anode of the valve will get unduly red, but no permanent damage will result unless the inverse voltage is excessive.

If, on the other hand, this happens with a mercury-vapour valve, disintegration of the filament is likely to occur, permanently damaging the valve.

It is also necessary that the secondary of the filament transformer be insulated to withstand the potential of the inverse voltage, as it is the positive side of the rectifier output and is above ground potential.

4. RECTIFIER CIRCUITS.

4.1 Rectifier circuits may be divided into the following classes -

(i) Half-wave circuits single-phase.
(ii) Full-wave circuits single-phase.
(iii) Bridge circuits single-phase.
(iv) Voltage doubling single-phase.
(v) 3-Phase half-wave.
(vi) 3-Phase half-wave double Y.
(vii) 3-Phase full-wave.

4.2 Half-Wave Single-Phase. Fig. 2 shows in simplified form the circuit and output wave form of a single-phase half-wave rectifier. V1 is the rectifier valve, and is conductive on the positive half-cycles of A.C. This circuit is used only when small currents are required, because the secondary current always flows through the transformer secondary in the same direction, thereby tending to saturate the iron. Regulation is poor and unsuitable for use with a mercury-vapour rectifier.

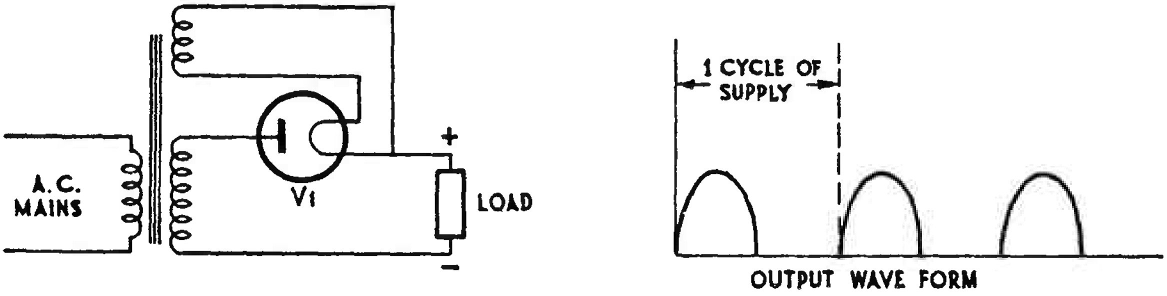

HALF-WAVE RECTIFIER (SIMPLIFIED).

FIG. 2.

4.3 Full-Wave Single-Phase. In this arrangement, a centre-tapped secondary, connected to the rectifiers V1 and V2, is required, as shown in Fig. 3.

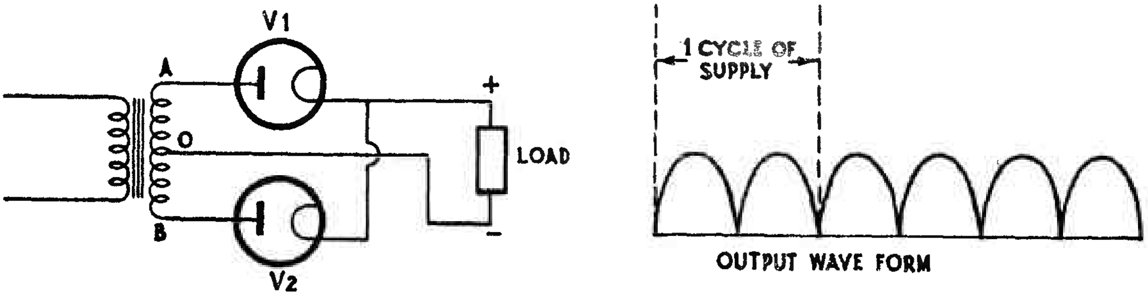

SIMPLIFIED FULL-WAVE RECTIFIER.

FIG. 3.

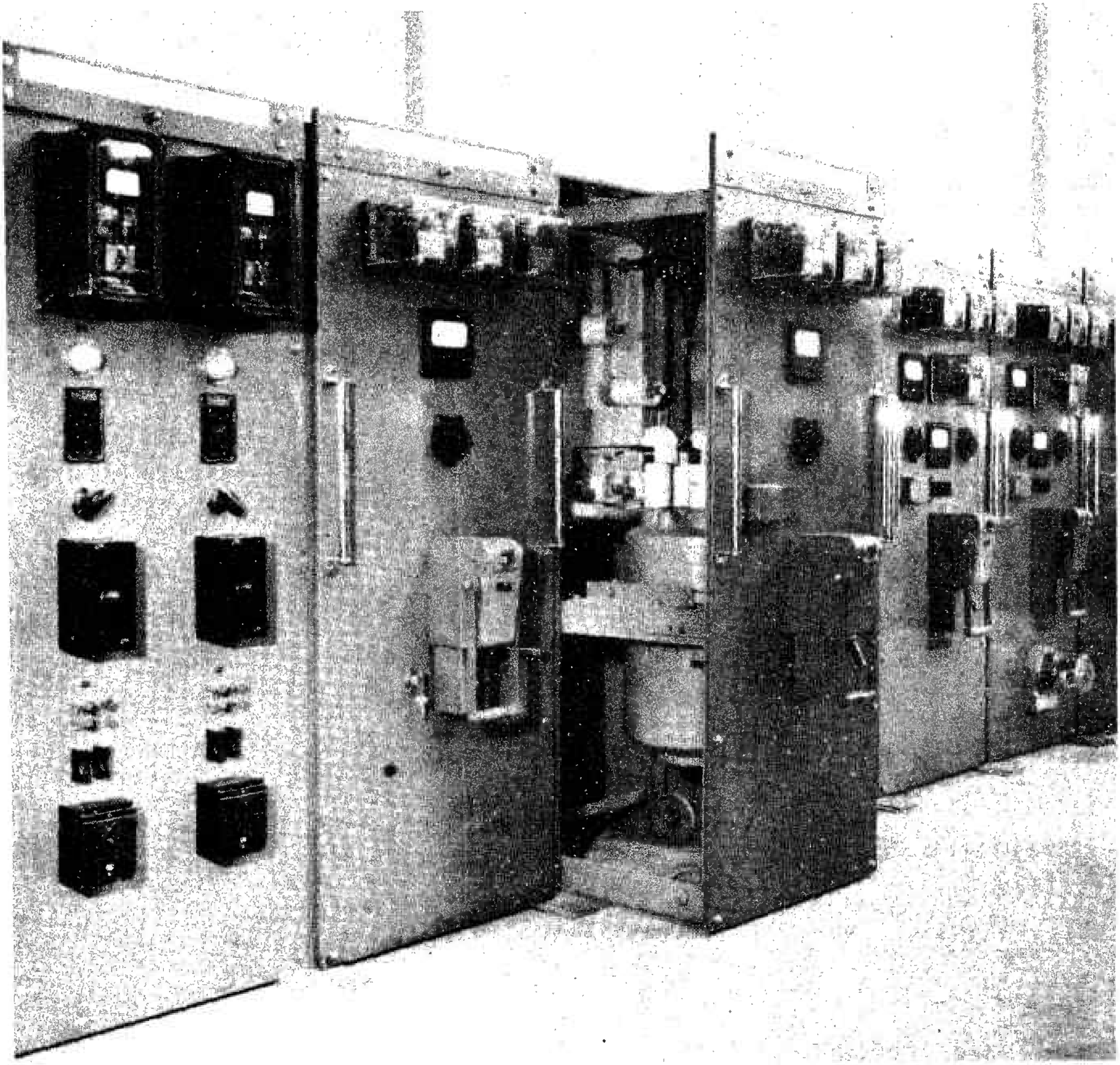

POWER DISTRIBUTION BOARD FOR TWO 100 kW TRANSMITTERS.

When the point A is negative with respect to O, then B is positive and V2 conducts, conversely, when B is negative A is positive and V1 conducts. Thus, each half-cycle of A.C. contributes to the load and the output wave form is as shown. It will be noticed that the gaps of Fig. 2 have been filled in. This wave form renders filtering and smoothing somewhat more readily accomplished than in the case of the half-wave circuit. The full-wave single-phase rectifier is used in the majority of radio receivers and low medium power transmitters, and, of course, is essential when a single-phase supply only is available.

4.4 Bridge Circuit, Single-Phase. As compared with the centre-tapped circuit, the bridge arrangement in Fig. 4 requires twice as many valves operated at half the inverse voltage, gives greater D.C. output power in proportion to the transformer kVA rating, but requires a filament transformer having three separate well-insulated windings instead of a single winding. The full-wave bridge circuit is generally preferred with metal (copper oxide or selenium) rectifiers.

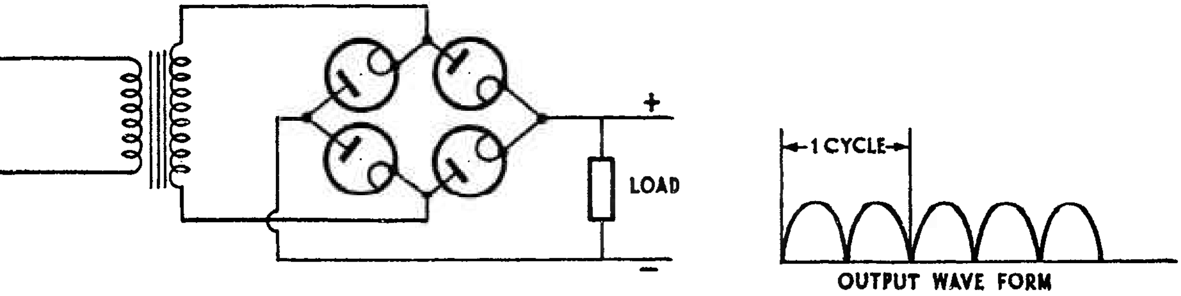

FULL-WAVE BRIDGE RECTIFIER.

FIG. 4.

4.5 Voltage-Doubling Circuit. Voltage-doubling circuits develop a D.C. voltage greater than the crest alternating voltage of the input. Such circuits are used when such high voltages are to be developed and it is not convenient to build a transformer for the full voltage, or when it is desired to obtain sufficient anode voltage to operate properly small valves from a 200 V source without using transformers.

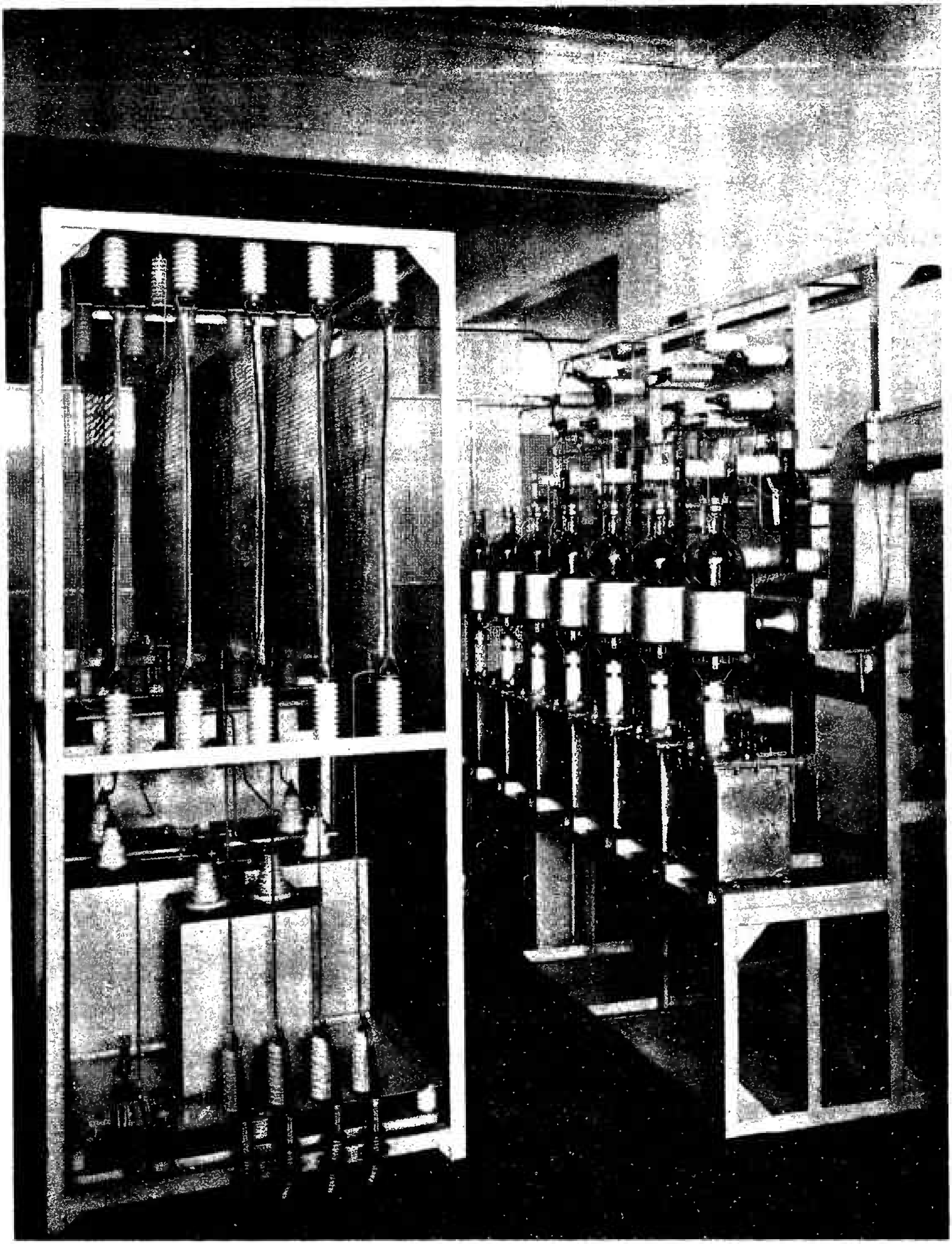

EXTRA HIGH TENSION RECTIFIER UNIT.
(10 kW BROADCAST TRANSMITTER. MEDIUM WAVE.)

Note resistance mats on left. These are associated with sequence application of transmitter power.

In Fig. 5, condensers C1 and C2 are charged on alternate half-cycles, and are then arranged so that the voltages of these two condensers add, thereby giving the possibility of an output voltage which is twice the peak voltage of the D.C. supply. Regulation, however, is poor, and the circuit is not suitable for use with mercury-vapour rectifiers.

Rectifiers of this type may be stacked to obtain any degree of voltage multiplication.

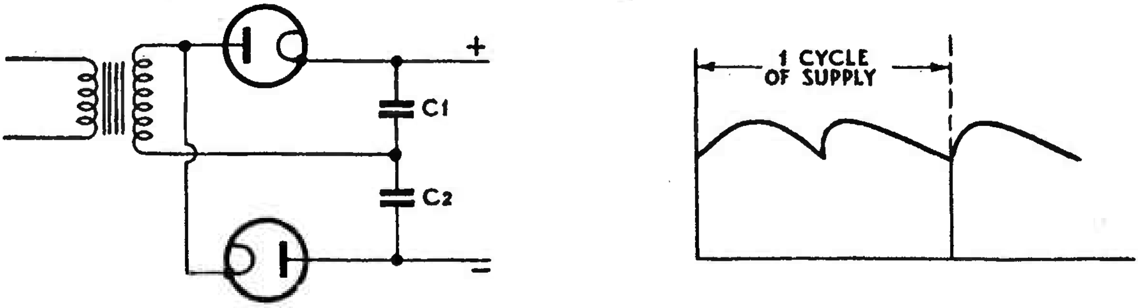

CONVENTIONAL VOLTAGE-DOUBLING RECTIFIER.

FIG. 5.

4.6 The rectifiers in paragraphs 4.7 to 4.9 are 3-phase rectifiers, and are used where a large amount of power is required. They use almost universally mercury-vapour rectifiers, with filters of the choke input type.

4.7 3-Phase Half-Wave Rectifier. In this circuit each valve conducts for 1/3rd of the time, and the effect on the output current is to give three pulses of D.C. for each 3-phase cycle of A.C. Thus, the output is easier to filter than is the full-wave single-phase case. (See Fig. 6.)

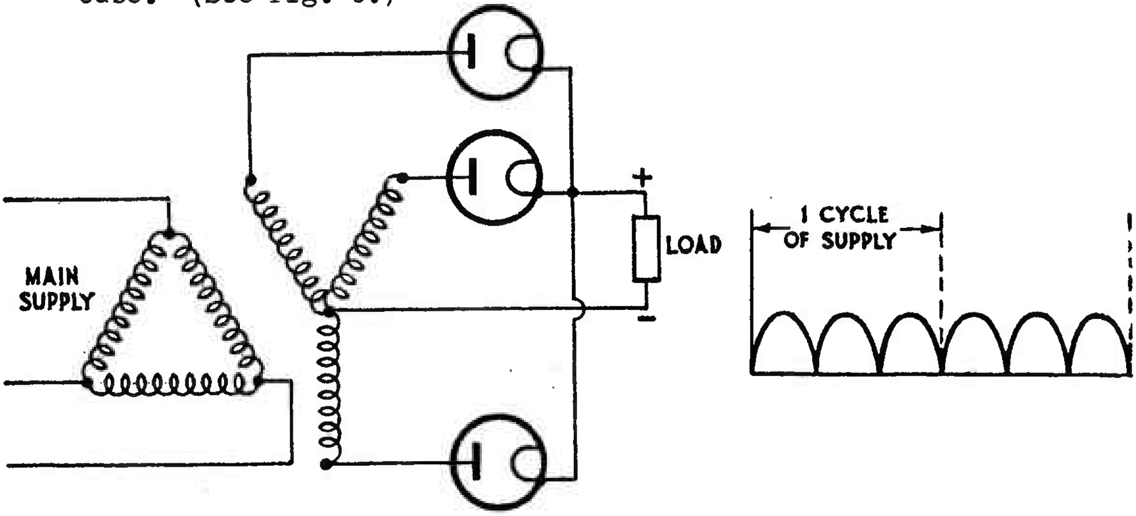

(a) Simplified Circuit. (b) Output Wave Form.

3-PHASE HALF-WAVE RECTIFIER.

FIG. 6.

The D.C. output is limited by the maximum allowable anode-current rating of the rectifier valve used. This circuit has the disadvantage that the transformer is subjected to D.C. magnetisation. To avoid that, it is general to use the "interconnected" or "broken star" arrangement of Fig. 7, where each phase of the transformer secondary is divided between two branches of the star.

It will be noticed in Fig. 7b that each core of the transformer has currents in opposite directions through them, which reduces the tendency to magnetising the core in direct proportion to the degree of balance achieved in the transformer design.

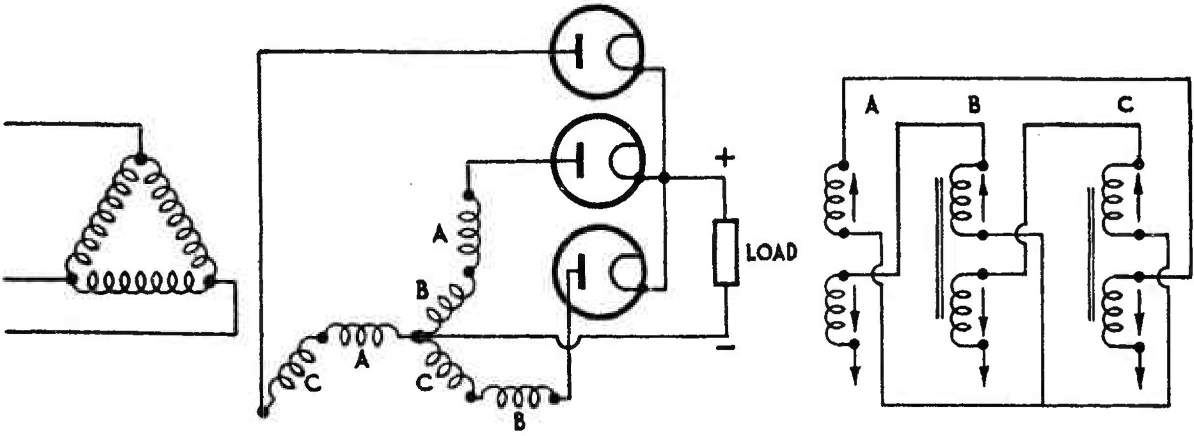

(a) Circuit.

(b) Actual Connections of Star Windings (Arrows Show Direction of Currents).

"INTERCONNECTED STAR" RECTIFIER.

FIG. 7.

The output wave form of this rectifier is the same as in Fig. 6b. This connection also permits the use of three single-phase transformers in lieu of one 3-phase transformer.

4.8 Half-Wave Double Y. Fig. 8a shows the double Y, or double 3-phase series connection. This circuit is, in effect, the same as two 3-phase half-wave circuits operating from a single 3-phase primary winding with the two sets of secondary windings connected so that the voltage is delivered to the anodes of the two sets of three valves each, 180° out of phase. The output wave form is much smoother than the rectifiers previously described, and the ripple frequency is six times the supply frequency as shown in Fig. 8b.

/ Fig. 8.

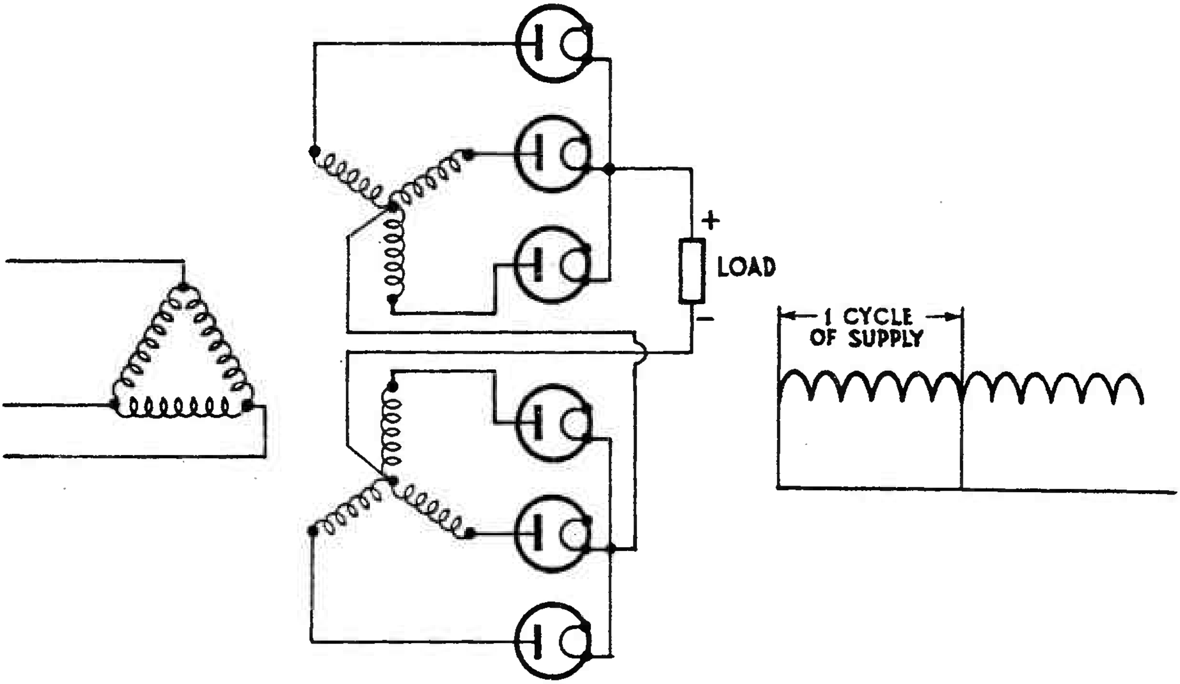

(a) Double Y Rectifier.

(b) Output Wave Form.

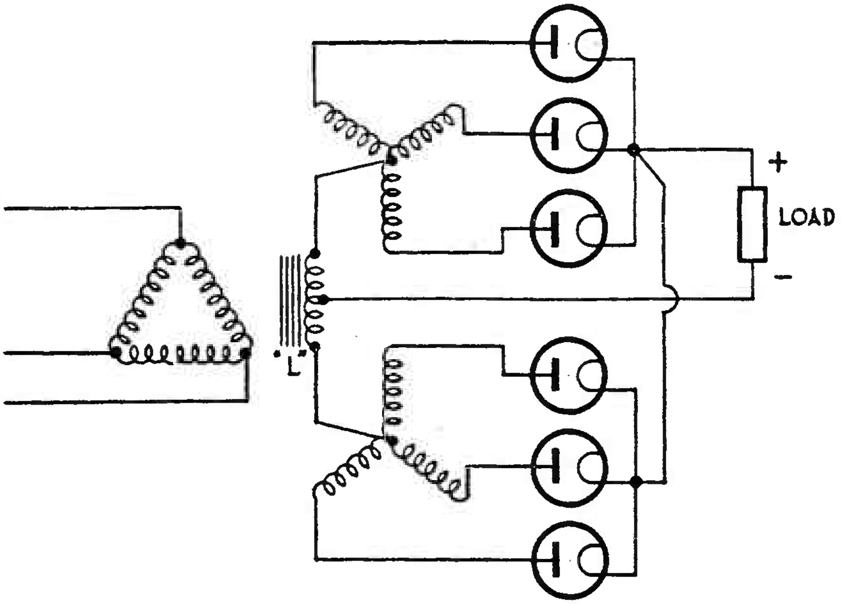

(c) Double Y With Reactor "L".

HALF-WAVE DOUBLE Y RECTIFIER.

FIG. 8.

This rectifier is improved by the addition of an "interphase reactor", as shown in Fig. 8c. This reactor has the effect of dividing the output current equally between the two star groups throughout the A.C. cycle. When it is omitted, the D.C. output voltage is higher but the current must be reduced to avoid exceeding the peak current rating of the rectifier. The transformer losses also are increased.

4.9 3-Phase Full-Wave Rectifier. This circuit, shown in simplified form in Fig. 9a, makes the most effective use of the transformer and rectifier valves of any of the 3-phase circuits shown, and also has the lowest inverse voltage of any of the circuits. The only disadvantage is that it requires four separate well-insulated windings on the filament transformer (see Fig. 9b). Although a delta primary connection is shown, a Y connection is also permissible. Fig. 9b shows some details of the circuit.

For given valve ratings this circuit gives the same current but twice the voltage given by a 3-phase half-wave circuit.

Note. By bringing out the neutral point of the transformer secondary, as shown by the dotted line, an additional output voltage equal to half the total output E is available at a comparatively low current rating. The ripple frequency is the same as in Fig. 8b, and its amplitude before filtering is less than 6 per cent. of the D.C. component.

/ Fig. 9.

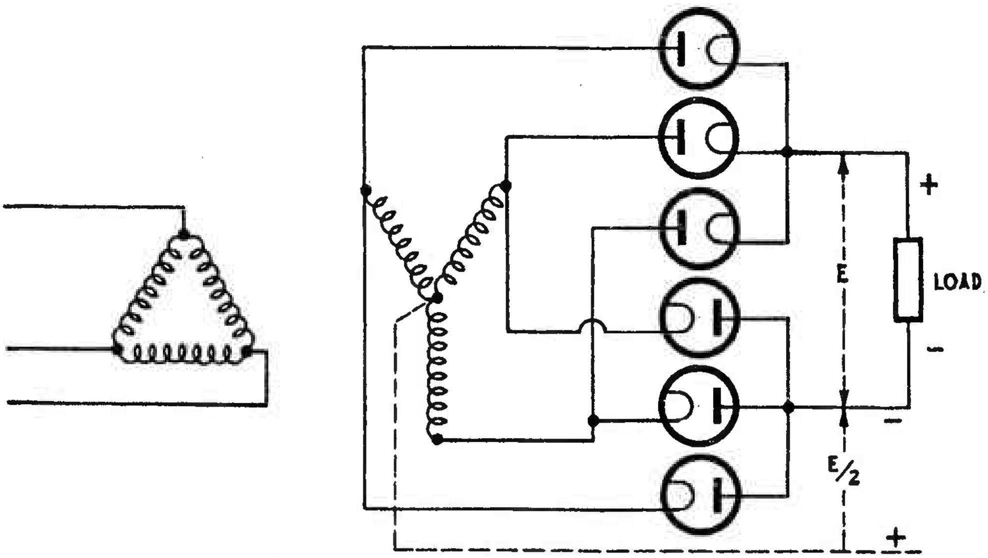

(a) Circuit.

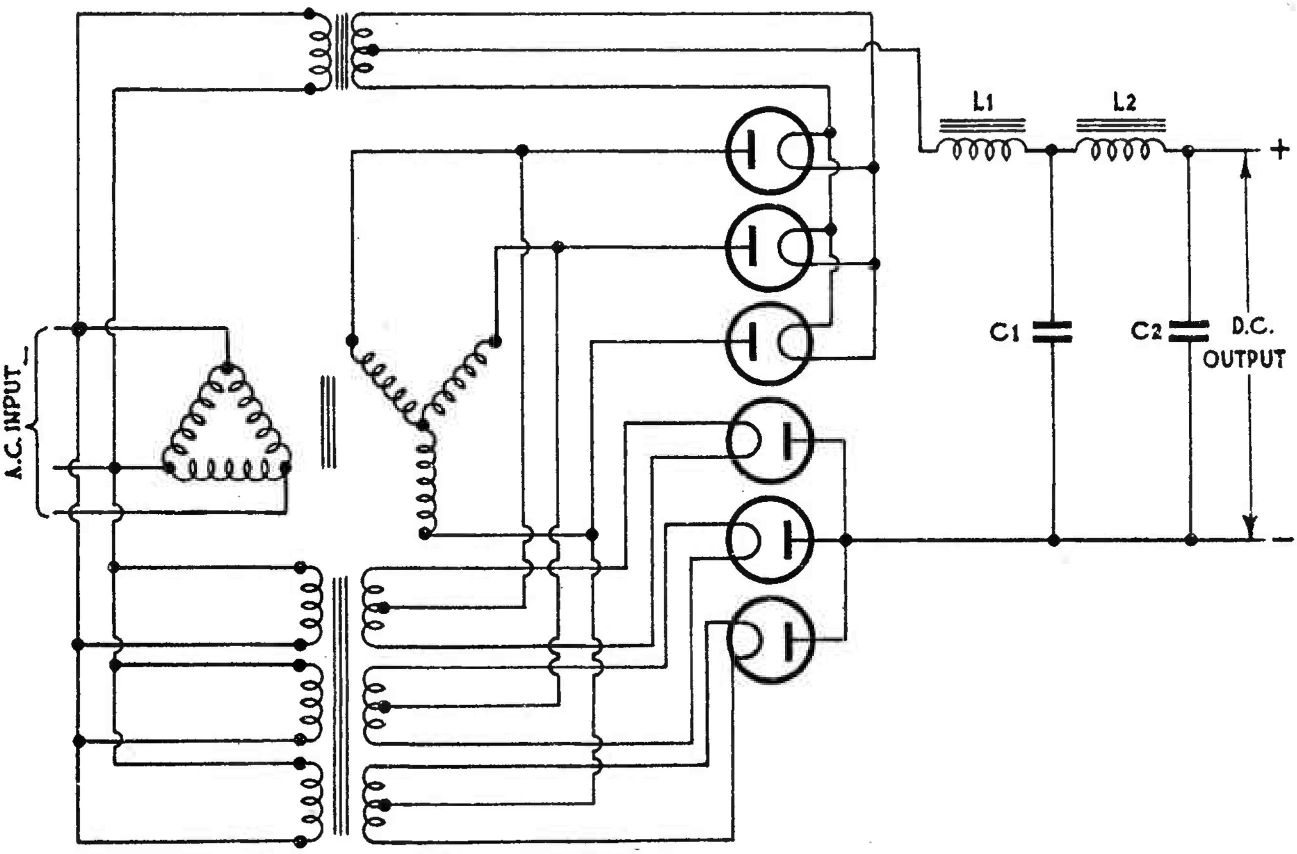

(b) Details.

3-PHASE FULL-WAVE RECTIFIER.

FIG. 9.

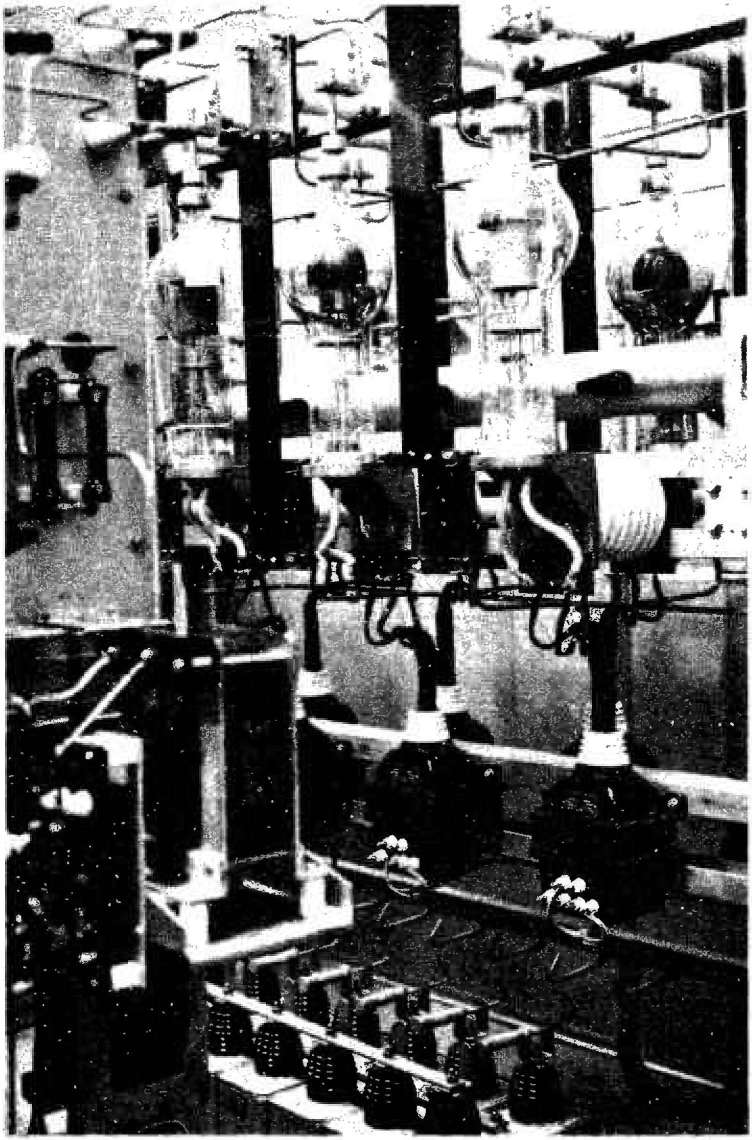

"RADIO AUSTRALIA."
PORTION OF RECTIFIER UNIT.

Note the position of filament transformers which are at a high voltage above ground. (See Fig. 9.)

5. 3-PHASE TRANSFORMER CONNECTIONS.

5.1 It might be as well here to refer to the methods of connecting transformers in a 3-phase circuit. There are two methods of connecting three windings of a transformer called "delta" and "Y" or "star".

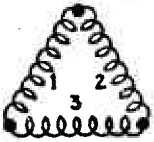

"DELTA."

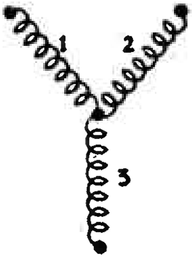

"STAR OR Y."

Since a transformer consists of primary and secondary windings, the connections available are -

(a) Delta-Delta.
(b) Star-Star.
(c) Delta-Star.
(d) Star-Delta.

In Figs. 10a and 10b, the voltage available in the secondary is equal to the primary voltage × step-up (or down) ratio of the primary to secondary windings.

Fig. 10c is the delta-star connection and the actual transformer wiring diagram.

In this case, the output voltage is obtained by multiplying the primary voltage by the step-up ratio of the transformer and then by 1.73, that is -

$$E_s = E_p \times \frac{N_s}{N_p} \times 1.73$$

where E_s = secondary voltage,
$\frac{N_s}{N_p}$ = transformer winding ratio,
E_p = primary voltage.

The 1.73 factor arises from the fact that whereas in the primary winding there is only one "coil" across line A_p, on the secondary side there are two coils across the line A_s. Thus, the voltage across A_s is the vectorial sum of the voltages across the coils X and Y. This can be shown to approximate 1.73. Thus, a delta-star connection gives a step-up of voltage from primary to secondary, though this is accompanied by a step-down of current, since power in primary and secondary must be the same. This connection is used extensively since it tends to compensate for voltage losses in transformers, etc.

Fig. 10d is the star-delta connection, and, in this case, there is a step-down of voltage accompanied by an increase of current in secondary. The effect is the opposite of Fig. 10c.

/ Fig. 10.

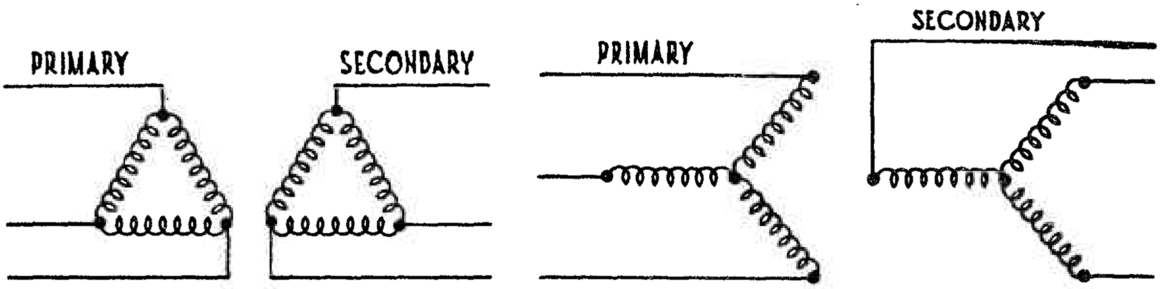

(a) Delta-Delta.

(b) Star-Star.

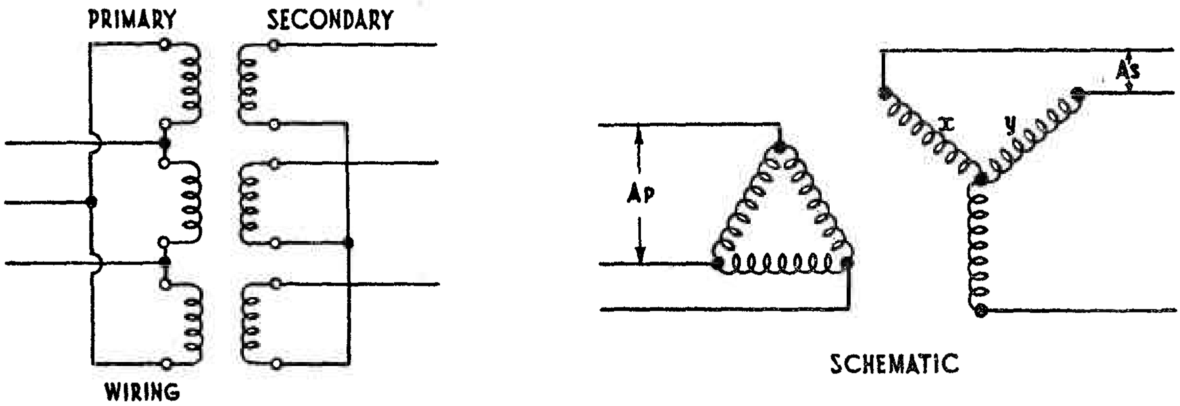

(c) Delta-Star.

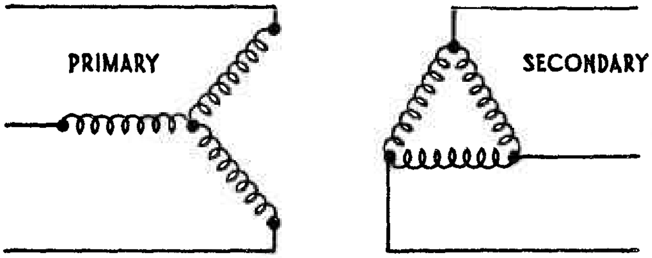

(d) Star-Delta (Schematic).

3-PHASE TRANSFORMATION.

FIG. 10.

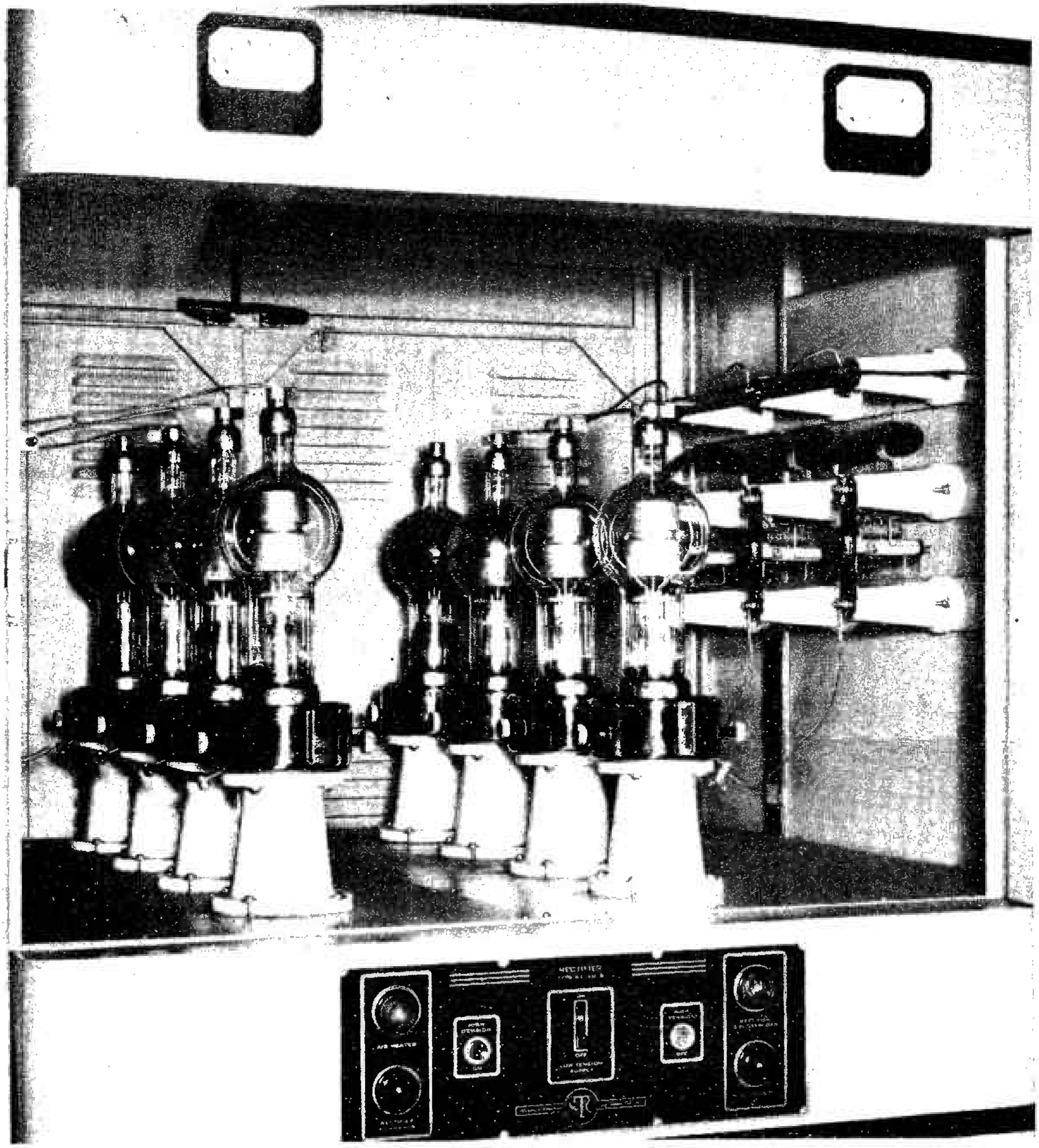

10 kW NEW TYPE TRANSMITTER RECTIFIER UNIT (S.T.C.).

6. RECTIFIER FILTER CIRCUITS.

6.1 It will be apparent from the description of electronic rectifiers that the D.C. output voltage has an alternating component superimposed on it at a frequency depending on the type of rectifier circuit used. This D.C. voltage, if used, would introduce hum noise into the radio circuits associated with the rectifier. It is thus necessary to provide filtering or smoothing circuits, in order that the output may be equivalent to a D.C. supply source. If we consider the mains supply as being 50 c/s, then the ripple frequencies will be as follows -

Supply mains	50 c/s.
Single-phase half-wave rectifier ..	50 c/s.
Single-phase full-wave rectifier ..	100 c/s.
3-Phase half-wave	150 c/s.
3-Phase full-wave	300 c/s.

The filter circuits for the 3-phase rectifiers are, therefore, simpler to design and construct.

Three types of filter are commonly used in power supplies. These are -

(i) Condenser input.
(ii) Choke or inductance input.
(iii) Combination of above.

6.2 Condenser Input Filter. In this filter, shown in Fig. 11a, a condenser is shunted across the rectifier output. This circuit is of principal value when the load current is small, as in voltage supplies to cathode-ray oscillographs.

Action of Filter Condenser. The first pulse of current passed by the rectifier partially charges the condenser. This is but a fraction of the total charge the condenser can hold. Since the valve is unilateral in conductivity, the charge can leak off the condenser only through the load. This it does slowly. Before it has all leaked away, however, another pulse of current flows and increases the charge on the condenser. Therefore, as the discharge of the condenser is slower than the charge, the condenser finally becomes charged to its rated capacity. Once the condenser is fully charged, the discharge action becomes

/ regular,

regular, as in Figs. 11b and 11c. As some period of time does elapse between pulses of current, the condenser discharges to a certain extent; so its potential is lower at the beginning of each pulse than at the end of the pulse. This causes a fluctuation in the voltage fed to the output, and is shown by the value E_c (points ab) of Fig. 11b.

The amount of fluctuation varies according to the time periods between the charging pulses, thus the full-wave circuit possesses less fluctuation (Fig. 11c) than the half-wave. These condensers are always of large capacity to avoid the possibility of their becoming discharged to an appreciable extent between the pulses.

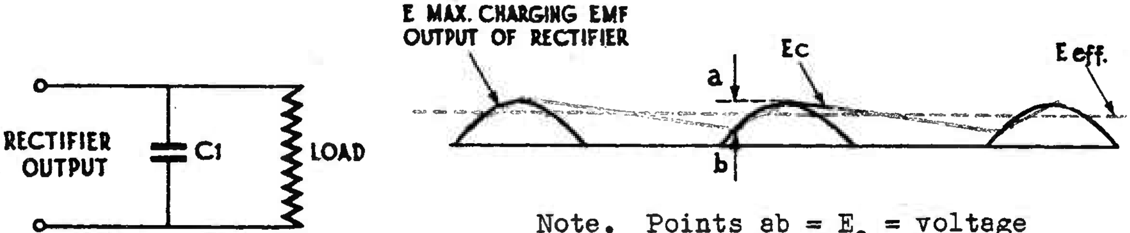

Note. Points ab = E_c = voltage fluctuation of condenser discharge.

(a) Condenser Filter.

(b) Half-Wave Rectifier Action.

Note. Points ab are much closer, meaning that the voltage fluctuation is less than in the half-wave case.

(c) Full-Wave Rectifier Action.

FILTER CONDENSER.

FIG. 11.

It has been found that, of the condensers used in condenser input filters, the first filter-condenser produces the greatest effect on the voltage output and regulation.

For relatively small power supply units, such as those required for radio receivers and low power transmitters, the electrolytic condenser combines a large capacity in a small space, and is in general use. A typical value is 8 μF with a working voltage of about 550/600 V.

"Radio

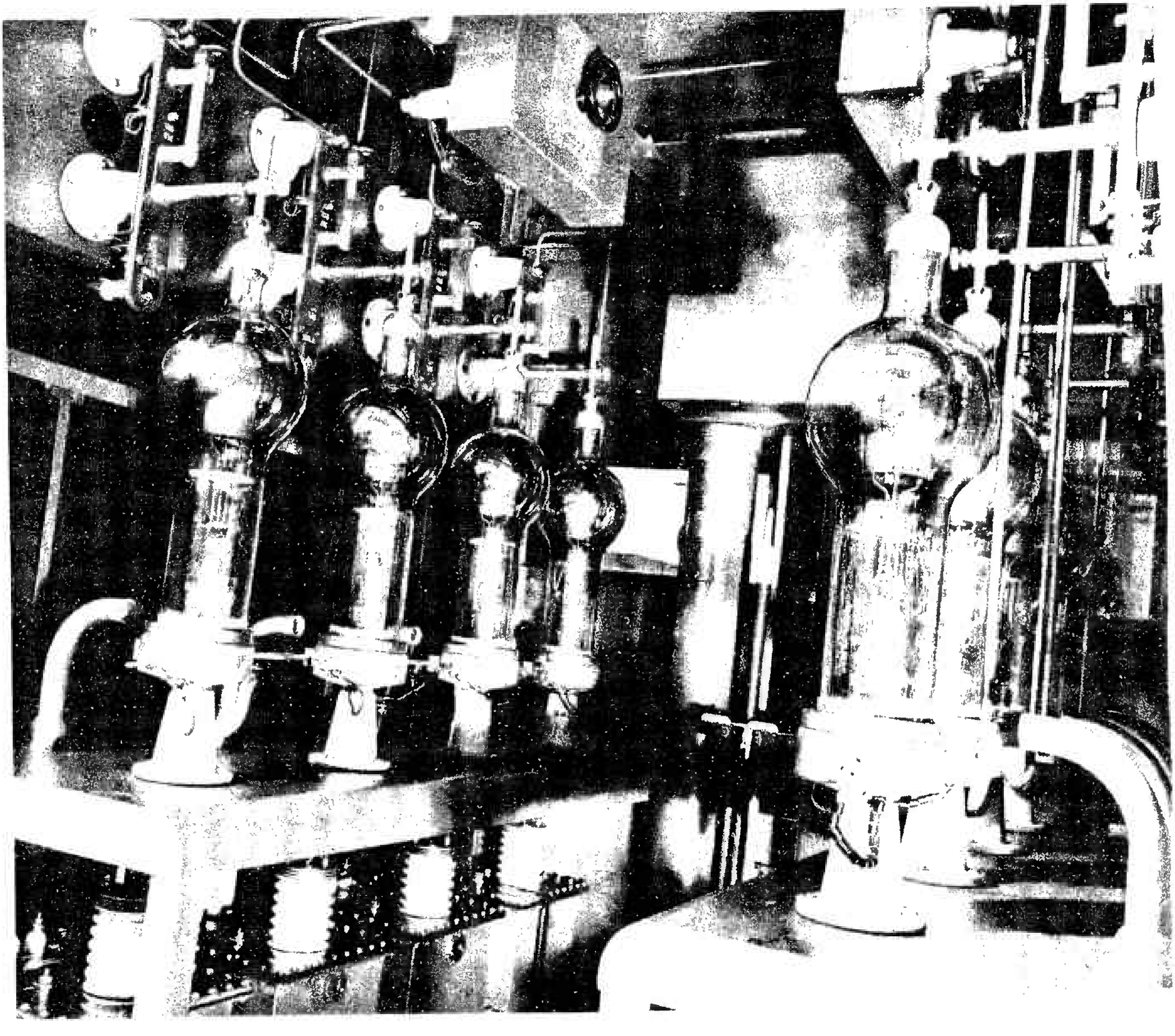

"RADIO AUSTRALIA."
PORTION OF HIGH TENSION RECTIFIER UNIT.

6.3 Choke Input Filter. Fig. 12a shows the choke input filter, L_1 being a choke or inductance usually of about 15 henrys, and C_1 an electrolytic or similar condenser of about 8 μF capacity. It will be recalled that an inductance tends to oppose any charge of current through it (Lenz law), so that the ripple component of the D.C. output current would tend to be smoothed out by this action. Consider the output current to have reached its D.C. value. Now the current tends to rise as a ripple pulse is impressed on the choke. This rise of current causes a disturbance of the lines of force around the choke and sets up a back e.m.f. which tends to oppose the rising current and modifies its effect. Suppose the pulse is decreasing in value, this also causes a disturbance of the lines of force, which disturbance sets up an opposition e.m.f. which tends to prevent the current through the choke decreasing. The condenser functions as described previously, and reduces the pulsations of the ripple still further, and the resulting current approaches steady D.C. conditions.

To summarise, the choke tends to smooth out the current pulsations and the condenser to smooth out the voltage variations.

Note. It is essential to use a choke input filter with mercury-vapour rectifiers. High-vacuum rectifiers may be followed by either choke or condenser input filters, the latter giving a higher output voltage than the former.

Fig. 12b shows that the general form of a choke input filter gives good filtering action.

Fig. 12c shows the attenuation versus frequency curve for typical power filter circuits, and it will be seen from this why better filtering is obtained with full-wave and 3-phase rectifiers where the ripple frequencies are from 100 c/s to 300 c/s.

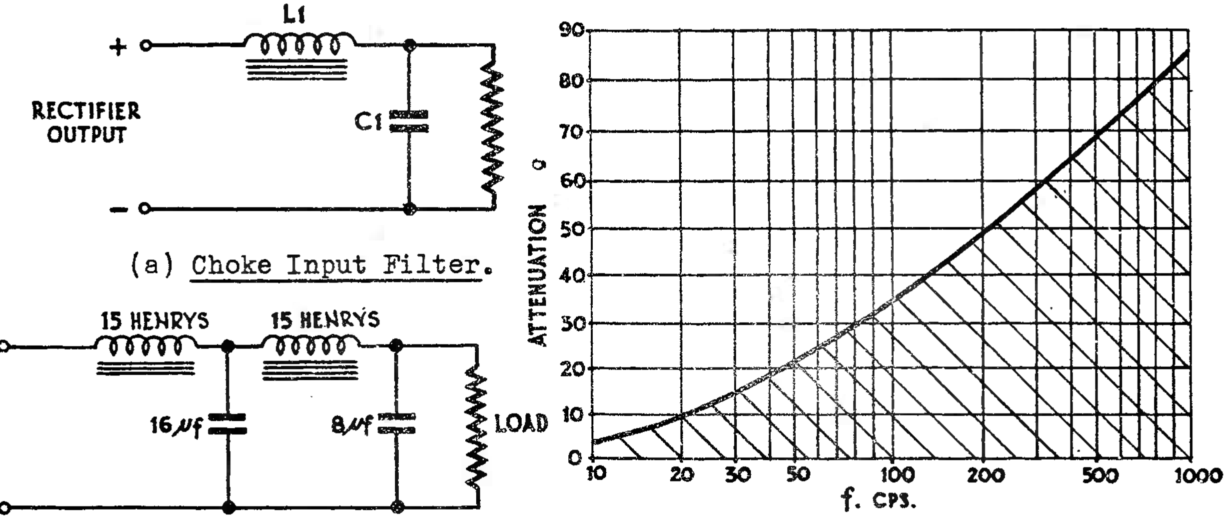

(a) Choke Input Filter.

(b) Typical Circuit.

(c) Insertion Loss of Power Filters.

CHOKE INPUT FILTER.

FIG. 12.

7. MISCELLANEOUS ELECTRONIC POWER SUPPLY CIRCUITS.

7.1 Brief reference will be made to some miscellaneous items associated with rectifier systems.

(i) Power transformers.
(ii) Voltage regulators.
(iii) Shielded transformers.
(iv) Electrolytic condensers.
(v) Voltage-dividers.
(vi) Losses.
(vii) Arc-back indicator.
(viii) Grid controlled rectifiers.
(ix) Rectifier troubles.

7.2 General Power Transformer Considerations. The design of the transformer is dependent upon the type of circuit and valves. Factors that must be taken into consideration are the primary and secondary volt-amperes, the secondary voltages and insulation required between windings.

Heating in a transformer used for rectifier service is more pronounced for a given power than when the same transformer is used as a conventional converter of A.C. This is due to the rectangular shape of the pulses flowing in the secondary, which have a greater heater effect than a pure sine wave. Transformers are designed, however, to run warm since it is uneconomical to design for cold running. The maximum temperature is kept to a moderate value to avoid damage to the insulation. Transformers are air-cooled except in the case of high-power circuits where oil cooling is usually provided.

Insulation. The insulation that must be provided for the secondary of the power transformer depends upon the rectifier connections involved. On the assumption that the negative side of the rectifier output is earthed, then, in the centre-tapped arrangement, the middle of the transformer requires negligible insulation, and the ends must withstand half of the total secondary voltage. In contrast with this, in the conventional voltage-doubling circuit the lower end of the transformer must be insulated to withstand the full secondary voltage to ground, while the other end must be capable of handling twice the secondary voltage.

In the 3-phase circuits, the insulation required varies with the circuits. In all cases except the 3-phase star (Fig. 6a) and the double arrangement with the balance coil (Fig. 8c), there is a winding or a portion of a winding subjected to a greater voltage to ground than the peak alternating voltage developed between the terminals of that particular coil. 3-phase rectifier circuits

/ "Radio

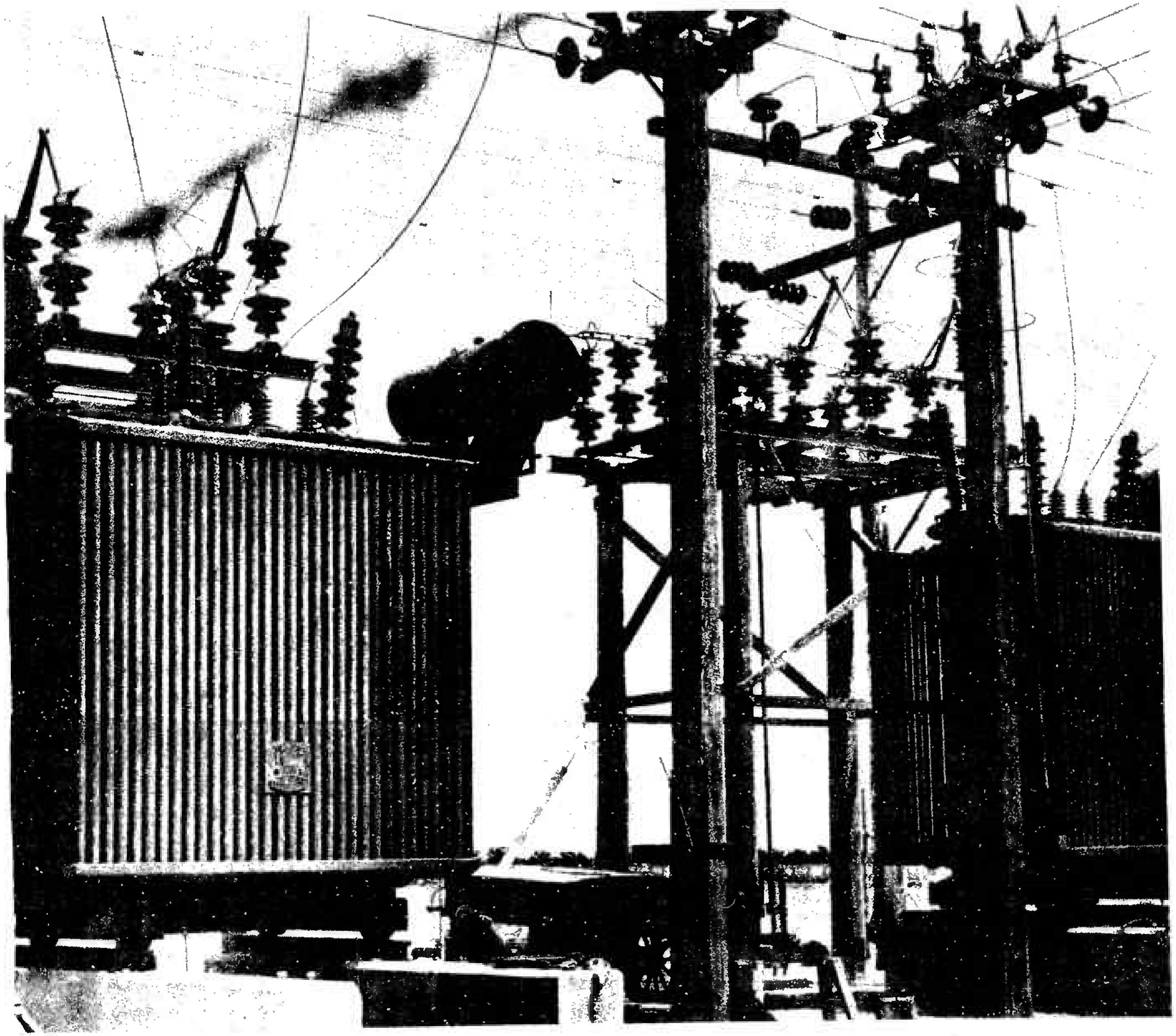

"RADIO AUSTRALIA."

"Step-Down Transformers from Supply Mains.

employing single-phase transformers designed for power-line service can be accordingly expected to overstress the insulation in many cases.

The secondaries of filament transformers must be well-insulated from earth, and from each other. Thus, in Figs. 7a and 7b, the secondary is subjected to half the transformer voltage, and, in Fig. 6a each filament winding must stand a voltage to earth equal to the full secondary voltage of the power transformer. In the 3-phase circuits of Figs. 6a, 7a and 8c, the filament winding is subjected to the full voltage to neutral of the power transformer, and, in Fig. 8a, the voltage stress is twice that developed to neutral by one set of transformers.

D.C. Saturation. It has been seen that the output of a rectifier consists of pulses of a unidirectional current. It is apparent, therefore, that these pulses being in one direction will tend to eventually cause D.C. saturation of the core. In other words, if D.C. pulses are caused to flow in a transformer winding, eventually the flux in the magnetic path of the transformer will become more or less fixed in one position, and the pulsating current will have but little effect in causing the flux to move. This condition is called D.C. saturation. D.C. saturation is a loss, and its effect is prevented by interrupting the magnetic path of a transformer or choke coil by means of an air-gap of a few hundredths of an inch. Filter or ripple chokes have direct current flowing through them and are usually provided with an air-gap in the core.

Another method of preventing D.C. saturation in high power rectifier transformers is to wind the secondary in sections or "pies" and then interlace the sections, that is, every other section is connected in series to form one side of the centre-tap. (See Fig. 13.)

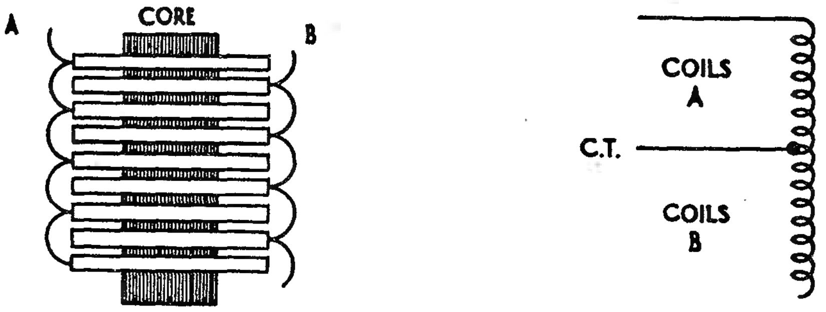

(a) Pies. (b) Circuit.

REDUCING D.C. SATURATION.

FIG. 13.

Rating. The rating of A.C. transformers depends on the amount of heat to which windings may be safely subjected. The amount of flux produced is dependent upon the voltage and current in the windings, and is independent of phase relations and, therefore, of power factor. It is usual to rate this equipment in kilo-volt-amperes (abbreviated kVA) which is -

$$\text{kVA} = \frac{\text{volts} \times \text{amperes}}{1{,}000}$$

and represents the safe output of the item under consideration.

7.3 Electrostatically Shielded Transformers. High-grade transformers for use in radio work usually have an electrostatic shield between the primaries and secondaries to prevent the transfer of any high-frequency disturbances in the power line from reaching the valve circuits connected to the secondary, and also to prevent any high-frequency disturbances being transferred from the secondary back to the power line. This shielding is connected to the transformer casing and to earth, thus effectively by-passing to earth all electrostatic e.m.f's. passing between the primary and secondary, and vice versa.

Another means of shielding is to place the outside windings of the secondary at earth potential by means of reversed winding. In this method, the two halves of the high-voltage winding have their outside terminals connected to earth instead of the plates of the rectifier, as is usual. This provides some measure of shielding.

7.4 Voltage Regulation. In many applications, it is desirable to make the power supply voltages to radio equipment substantially independent of fluctuations of mains voltages, or variations caused by changing load conditions. Several means of accomplishing this are available -

(i) An electronic voltage stabiliser employing a series regulating valve.

(ii) Magnetic voltage regulator utilising magnetic saturation.

(iii) A neon voltage regulating valve.

(iv) A ballast lamp.

/ Voltage

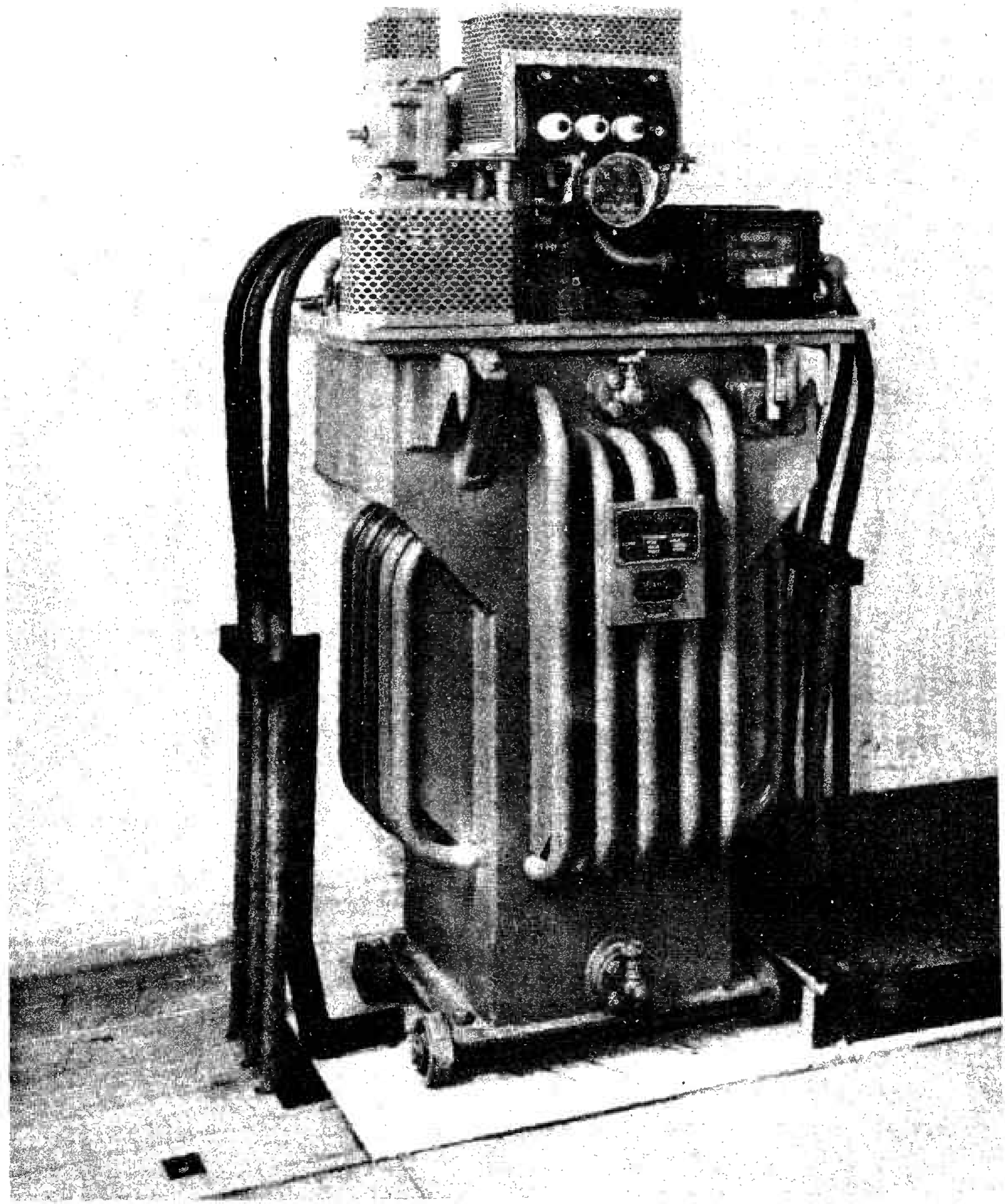

VOLTAGE REGULATION TRANSFORMER.

Electronic Stabiliser. A typical regulator of this type is shown with a full-wave rectifier in Fig. 14. The system operates in such a way as to cause the output voltage E_0 to be substantially independent of the load impedance Z_L, or of the D.C. voltage E developed by the filter output. This is because any fluctuation in the output voltage will vary the potential E_1 applied to the grid of V_2 and hence the grid-cathode potential, since the regulating action of the neon lamp V_3 keeps the cathode potential E_3 of V_2 constant. Any variation in output voltage is accordingly applied to V_2, and, after amplification by this valve, affects the grid potential of V_1 in such a way as to produce a change in voltage drop in this valve that opposes the change in output voltage. The value of output voltage that the system attempts to maintain is determined by voltage E_1 and hence can be readily controlled by the setting of the potentiometer R_2.

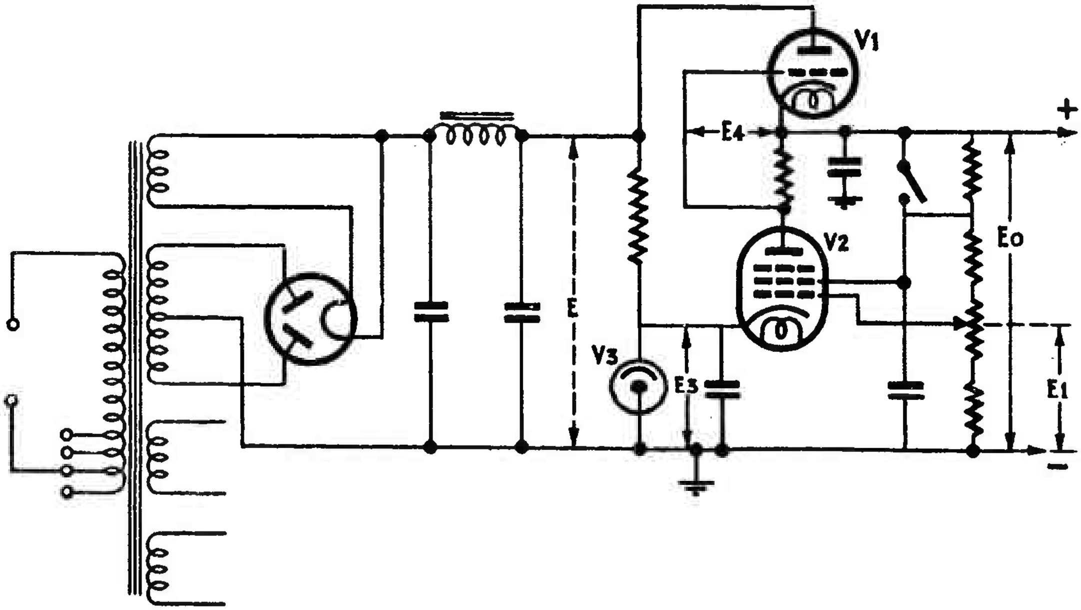

TYPICAL ELECTRONIC VOLTAGE REGULATOR.

FIG. 14.

The fact that the output potential E_0 tends to be independent of the load placed on the system causes E_0 to act as though it had very low internal impedance. This property is very helpful in eliminating regeneration and motor-boating in multi-stage audio amplifiers, and in preventing coupling between different types of equipment operating from the same supply system.

/ Electromagnetic

Electromagnetic Regulation. The theory of operation of the voltage regulating transformer centres around the principle of the reduction in impedance of a reactor when its core is saturated. A schematic circuit of a typical system is shown in Fig. 15.

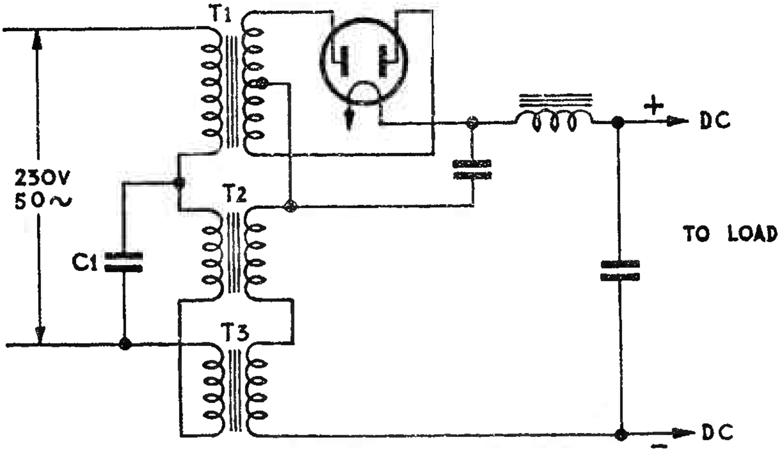

ELECTROMAGNETIC REGULATION.

FIG. 15.

In this system there are two transformers T_2 and T_3, in addition to the normal transformer T_1. T_2 and T_3 are the regulating transformers, and their secondary windings are connected in series and then in series with the load. Their primaries are in series with the primary winding of T_1. Transformers T_2 and T_3 are designed so that the normal current through the secondary windings brings them close to D.C. saturation. Now, if the load current increases, the secondary voltage would tend to decrease, but the increased current through T_2 and T_3 causes these transformers to approach saturation. This increase in flux reduces the reactance of the primaries and allows a higher voltage to be applied to the primary of T_1. This, in turn, results in a higher secondary voltage to the rectifier with a consequent higher voltage to load. Thus, the increased current is balanced by an increase of secondary voltage.

If the load current decreases, the voltage across the secondary would tend to rise, but the smaller current causes a decrease in the flux of T_2 and T_3. This, in turn, increases the reactance of the primary and reduces the voltage applied to the primary of T_1, which reduces the voltage to rectifier and load. Thus, a decrease in load current results in a decrease of secondary voltage. Both these effects combine to keep the rectifier output voltage constant within small limits when the load on the rectifier is varying.

/ It

It is necessary that the secondary windings of T_2 and T_3 be in opposition, and that they be very closely balanced to avoid the introduction of ripple voltage to the D.C. output. Condenser C_1 allows the regulation of the transformer to be varied by shifting the phase relations of the two units.

Neon Valve Regulation. Fig. 16 shows a regulated power supply using neon valves V_2 and V_3 to provide regulated voltage to radio frequency amplifier and oscillator stages. A neon valve or neon lamp is a diode containing an inert gas, such as neon gas. This valve is non-conducting until the "striking" voltage is reached (usually between 100 and 150 V, depending on design). When this point is reached, the gas suddenly ionises and the valve becomes conducting. This condition persists until the voltage drops to the "extinguishing" value, when conduction ceases. The neon lamp will give a constant voltage drop with wide variations of current through it. Typical regulators of this kind are the VR105/30 and 150/30, the figures 105 and 150 representing the voltage drop and 30 being the normal current through them (30 mA). This system likewise gives the equivalent of a low impedance output and reduces hum.

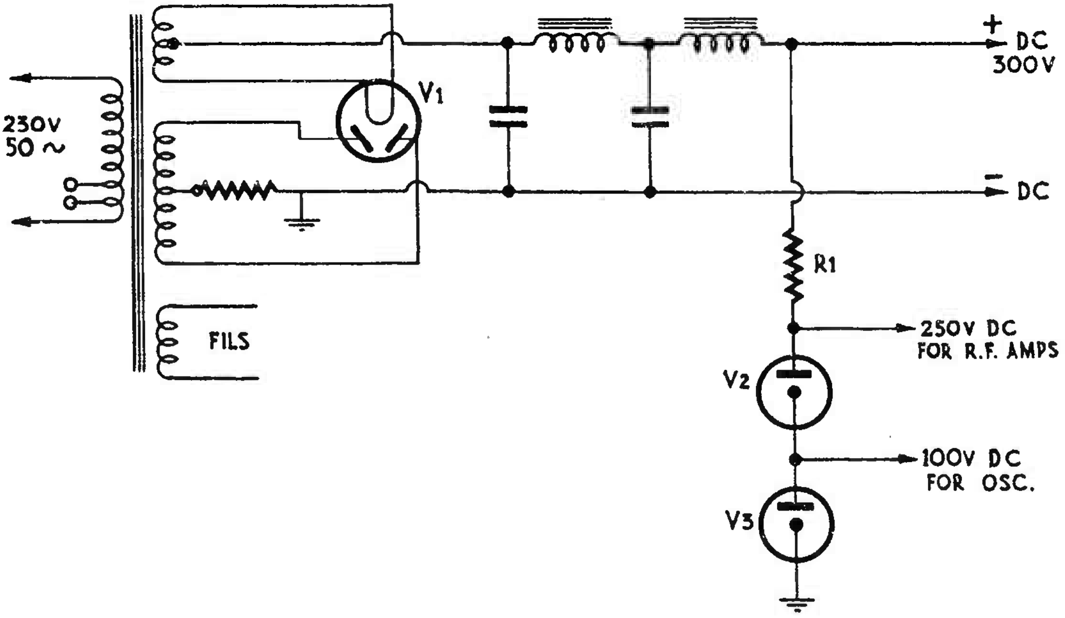

REGULATED POWER SUPPLY SUITABLE FOR RADIO RECEIVER.

FIG. 16.

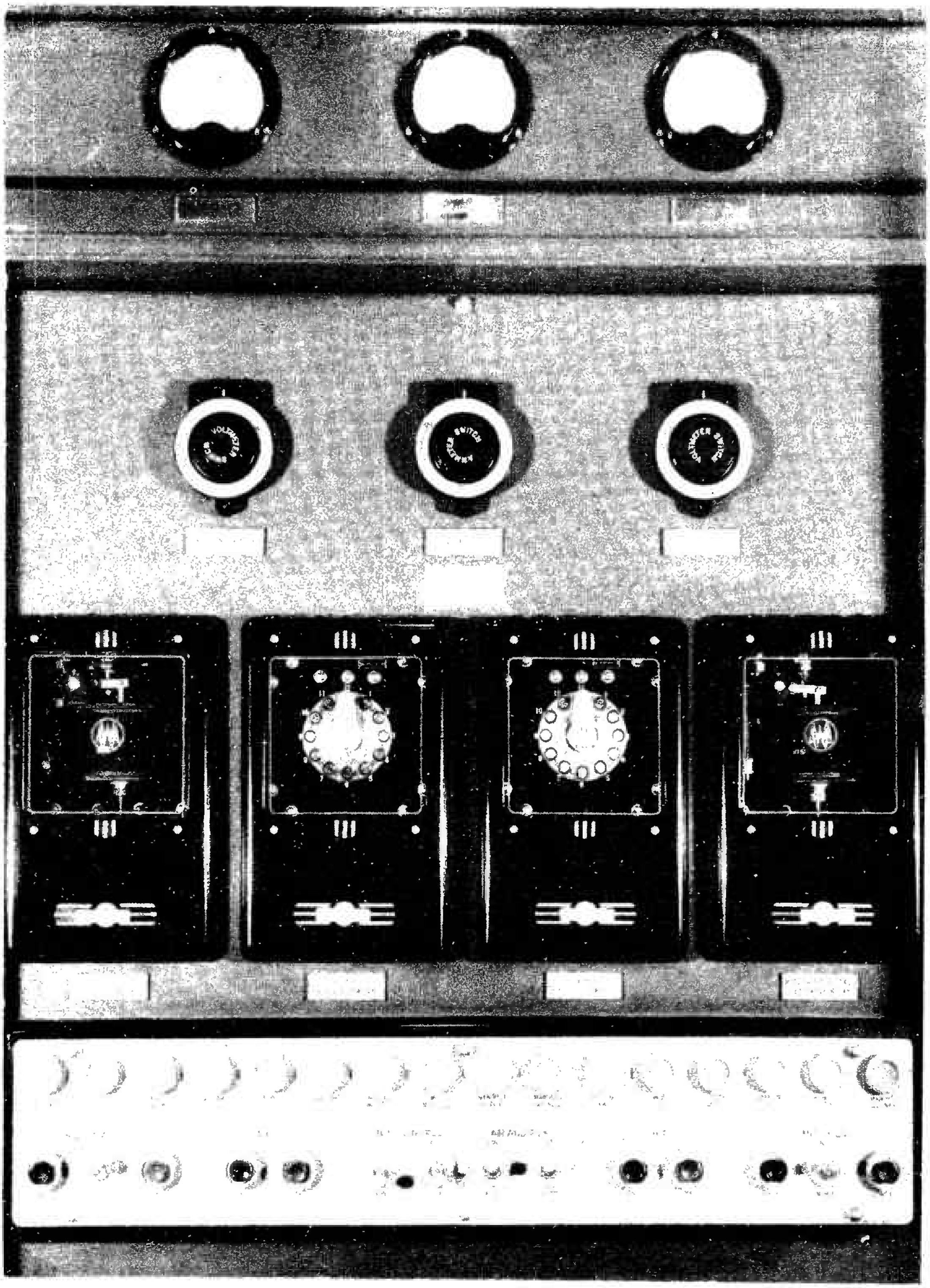

POWER CONTROL PANEL 100 kW TRANSMITTER, SHEPPARTON.

Voltage Regulation Using Ballast Lamps or Resistances. A ballast resistance or lamp is one having a temperature coefficient of resistivity such that, over an appreciable range of voltage, the current through the resistance is independent of voltage. Such a characteristic is shown in Fig. 17. A ballast resistance placed in series with the filament of a valve or the primary of a transformer will accordingly absorb moderate voltage fluctuations and maintain the current through the valve constant.

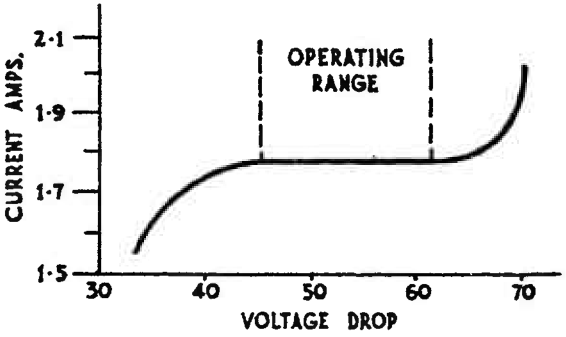

BALLAST RESISTANCE CHARACTERISTIC.

FIG. 17.

7.5 Electrolytic Condensers. Considering the wide use of electrolytic condensers, it is appropriate here to briefly review their characteristics.

The electrolytic filter condenser depends for its operation on the fact that certain metals, when used as anodes in certain electrolytes, become coated with a very thin insulating film due to polarisation. This film acts as a dielectric separating the two electrodes constituting the condenser.

The wet type is enclosed in a container which also holds the liquid electrolyte. Into the container is placed a number of corrugated aluminium plates which are bent into ridges to increase their surface area, and, consequently, the capacity of the condenser. These plates form the anode of the condenser, the liquid constituting the other electrode. Various types of electrolytes will operate in the electrolytic condenser, such as ammonium citrate, or a solution of borax and boric acid in water. The latter is non-combustible, non-poisonous and non-injurious to clothing, and is commonly used.

This type of condenser has a unilateral conductivity characteristic, that is, it has an exceedingly high resistance to current flowing in one direction, but a very low resistance to current flowing in the other.

In use, the anode of the electrolytic condenser must be connected to the positive side of the line, and the electrolyte to the negative side. Reversals of these connections will ruin the condenser. When voltage is applied across the condenser, the insulating film is formed and, provided the safe working voltage is not exceeded, will give years of useful service. Because of the thinness of the dielectric, it is possible to get very high capacity in a small space.

Their power factor is low, but this does not matter in ripple filter circuits.

It is advisable to connect the condenser across a live circuit at least once a week in order to keep the film on the anode, otherwis the sudden application of voltage may puncture the anode.

Dry electrolytic condensers are the same as the above, except that the electrolyte is in the form of a paste impregnated on gauze.

Advantages of Electrolytic Condensers.

(i) Low cost per µF.
(ii) Very large capacity in proportion to volume.

Disadvantages.

(i) Poor power factor.
(ii) Appreciable leakage.
(iii) Unsuitable for A.C. circuits.

7.6 Voltage-Dividers. In a large number of cases, particularly in radio receivers, various voltages and currents are required from a rectifier output. It is convenient to use a voltage-divider to enable the different voltages to be readily obtained. A voltage-divider is simply a lapped resistance or series of resistances built up according to Ohm's Law.

The best explanation is to design one for a typical case.

/ Assume

Assume that the supply voltage is 300 V, from which the following voltages and currents are required -

(i) 300 V at 30 mA.
(ii) 265 V at 25 mA.
(iii) 220 V at 10 mA.
(iv) 150 V at 10 mA.
(v) 100 V at 5 mA.
(vi) 75 V at 5 mA.
(vii) Bleeder current 15 mA.

Note. "Bleeder current" is current required to keep a load on rectifier when circuits A to F are inoperative.

Set out the problem as in Fig. 18, and then proceed as follows -

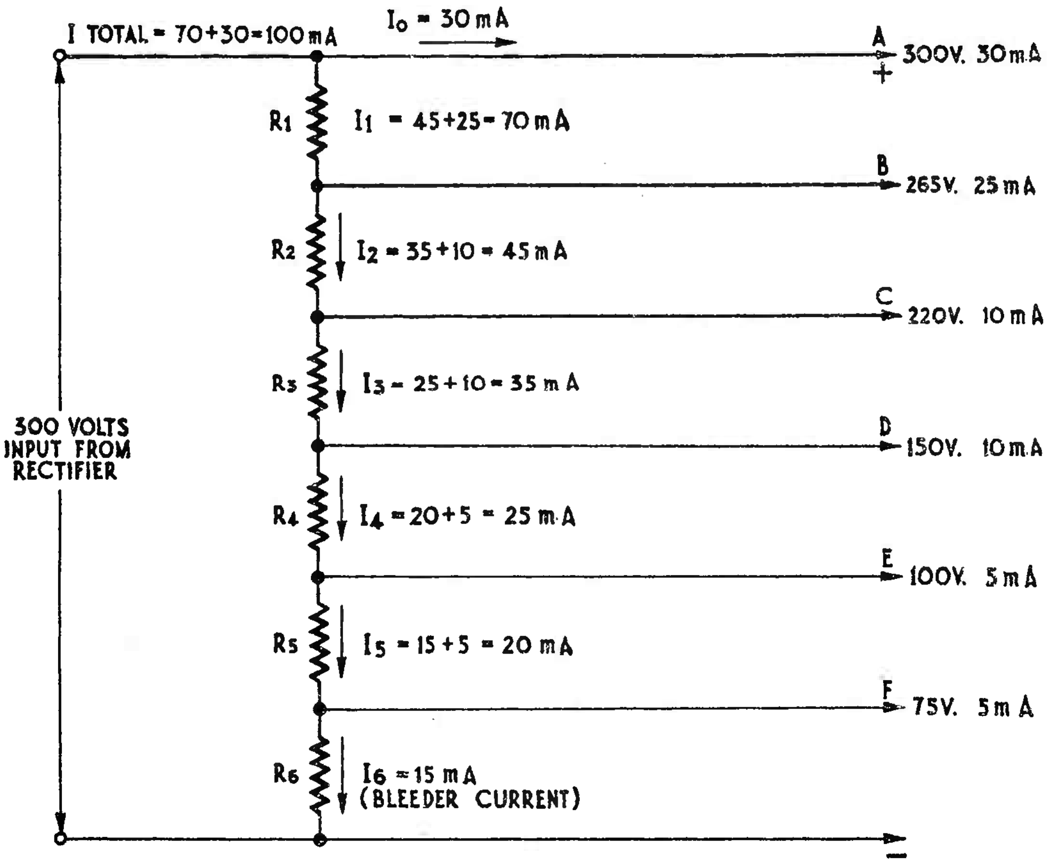

PLANNING THE PROBLEM.

FIG. 18.

Step 1. Find total current required from rectifier, as shown in Fig. 18.

Step 2. Circuit A requires 30 mA at full voltage, therefore, no voltage dropping resistor is required.

Step 3. Circuit B requires 25 mA at 265 V, thus the voltage drop across R_1 must be $300 - 265 = \underline{35\ V}$.

Current through $R_1 = I_1 =$ total current minus 30 mA taken by circuit A.

$$I_1 = 100 - 30 = 70 \text{ mA.}$$

$$\therefore R_1 = \frac{\text{voltage drop across } R_1}{\text{current through } R_1} = \frac{35}{0.07} = \underline{500 \text{ ohms}}.$$

Step 4. Circuit C requires 10 mA at 220 V. Then, as before, voltage drop across $R_2 = 265 - 220 = 45$ V.

Current through $R_2 = I_2 = 45$ mA.

$$\text{Thus } R_2 = \frac{45}{0.045} = 1{,}000 \text{ ohms.}$$

Step 5. Circuit D requires 10 mA at 150 V. Voltage drop across $R_3 = 220 - 150 = 70$ V.

Current through $R_3 = I_3 = 35$ mA.

$$\therefore R_3 = \frac{70}{0.035} = 2{,}000 \text{ ohms.}$$

Step 6. Circuit E requires 5 mA at 100 V. Voltage drop across $R_4 = 150 - 100 = 50$ V.

Current through $R_4 = I_4 = 25$ mA.

$$\therefore R_4 = \frac{50}{0.025} = 2{,}000 \text{ ohms.}$$

Step 7. Circuit F requires 5 mA at 75 V. Voltage drop across $R_5 = 100 - 75 = 25$ V.

Current through $R_5 = I_5 = 20$ mA.

$$\therefore R_5 = \frac{25}{0.02} = 1{,}250 \text{ ohms.}$$

Step 8. Now R_6 has to drop the remaining voltage with a current of 15 mA. Voltage drop across $R_6 = 75 - 0 = 75$ V.

Current through $R_6 = I_6 = 15$ mA.

$$\therefore R_6 = \frac{75}{0.015} = 5{,}000 \text{ ohms.}$$

/ Thus

Thus, the voltage-divider would be made up as in Fig. 19.

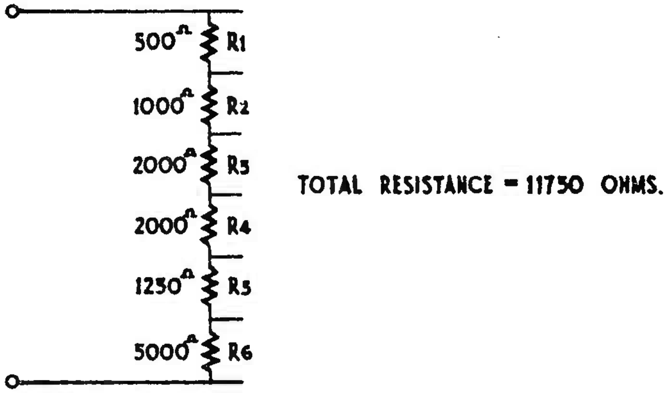

COMPLETED VOLTAGE-DIVIDER.

FIG. 19.

It is important then to consider the watts to be dissipated by each section of the divider. This may be conveniently calculated from the known values of E and I.

$\underline{R_1}$ EI = 35 × 0.07 = 2.75 watts.

$\underline{R_2}$ EI = 45 × 0.045 = 2.03 watts.

$\underline{R_3}$ EI = 70 × 0.035 = 2.75 watts.

$\underline{R_4}$ EI = 50 × 0.025 = 1.25 watts.

$\underline{R_5}$ EI = 25 × 0.02 = 0.5 watts.

$\underline{R_6}$ EI = 75 × 0.015 = 1.13 watts.

It is always best to underrun resistors so that if 10 watt types were used for R_1, R_2 and R_3 and 5 watt type for R_4, R_5 and R_6, this condition would be met. Probably, in practice, a long wire-wound resistor of about 15,000 ohms at 10 watts could be used with tappings adjusted as required.

7.7 Losses in Rectifier Apparatus. The output voltage of the rectifier power supply is the voltage of the transformer secondary passed by the valve minus the loss in the rectifier valve and filter. The loss in the mercury-vapour type of valve is low and averages 15 V, whereas, in the high-vacuum type, it depends on the current drawn by the load and may thus be from a few volts to several hundreds. This latter loss may be determined by inspecting the

characteristic

characteristic curve of the valve at different loads. If two valves are used in series, as in a voltage-doubler circuit, the loss is twice that of one valve. The voltage loss in filter chokes may be found by Ohm's Law, E = IR. For example, a 15 henry choke with a resistance of 200 ohms would have a voltage drop across it of 30 V for a load current of 0.15 A (150 mA). Similarly, with any other resistance in the output circuit of the rectifier.

7.8 Arc-Back Indicator. In water-cooled or forced air-cooled mercury-vapour rectifier valves operating at high voltages, trouble is frequently encountered from "arc-backs" or "flash-backs" in the valve. One cause of this is the breakdown due to excessive inverse peak voltage, and results in the formation of an arc between anode and cathode. This arc, as well as damaging the valve, places a short circuit across the anode supply. It is usual to fit an arc-back indicator in the rectifier valve circuits as shown in Fig. 20.

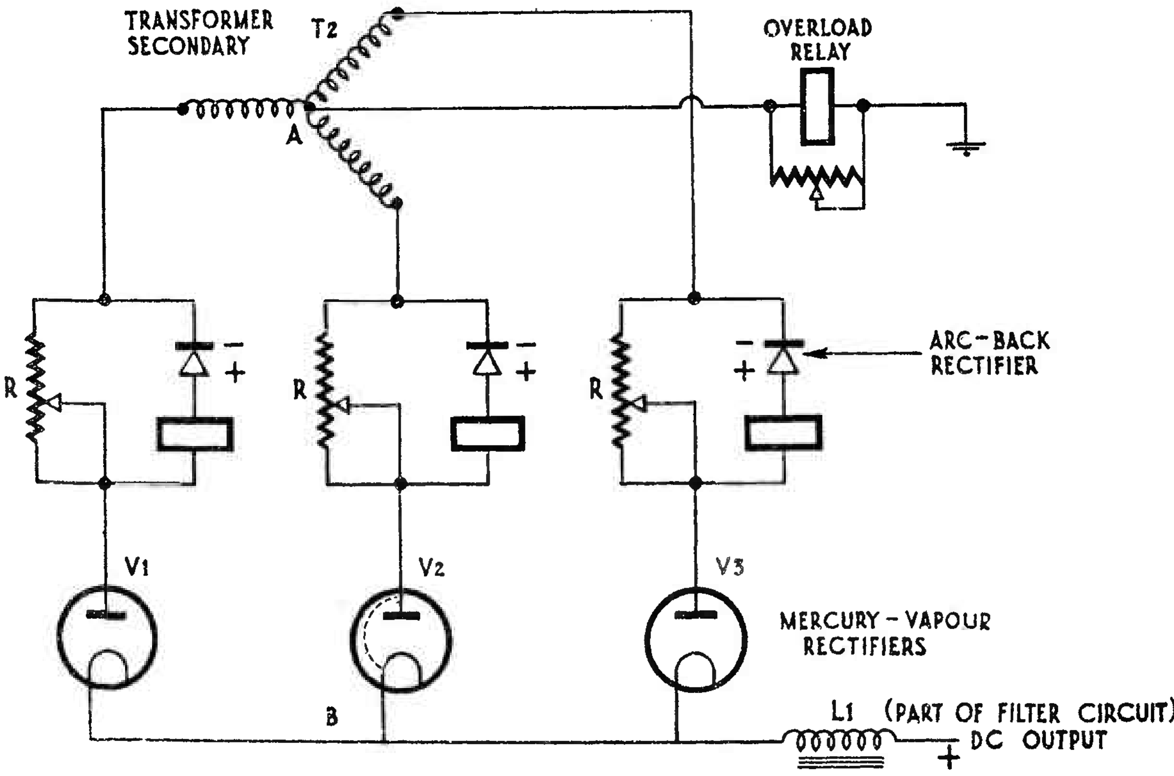

ARC-BACK INDICATOR CIRCUIT.

FIG. 20.

Suppose an arc-back to occur in rectifier valve V_2, as shown by the dotted line. This is practically a short circuit across the points AB, that is, in effect, a short across the D.C. output supply. Consequently, there will be a heavy load placed on transformer T_2 with possible damage to transformer and valves.

Note that although this condition constitutes an overload, the overload relay will not operate since the short circuit is on the rectifier side of this relay.

7.9 Grid Control Arc Rectifiers. Grid control rectifier valves have the addition of a control grid which functions similarly to the control grid of a triode. The grid usually consists of a metal ring around the envelope of the valve (in a special recess in the glass) and can be supplied with D.C., A.C. or both. When used with D.C., it behaves as in the triode case, a negative potential reducing the anode current. When A.C. is used, it is usually at the same frequency as the A.C. which is being rectified, but, by providing a means of varying the phase of the grid supply with respect to that of the anode supply, the effect of a negative grid potential is obtained. The use of phase control affords a simple means of controlling the output voltage of a rectifier. In power supplies for transmitters, gradual increase of voltage in starting prevents damage to transmitting valves and also prevents failure of filter condensers as a result of large current surges.

The likelihood of arc-back (see paragraph 7.8) is reduced by the use of grids in mercury-vapour rectifiers. They may also be used to provide high-speed automatic regulation of the direct voltage, and to make possible interruption of the anode current within the period of one cycle of the supply frequency (that is, within 2 milliseconds for a 50 c/s supply) should a short circuit or other overload occur.

The circuit may be designed so that the energy stored in the filter is returned to line by inverter action, instead of being dissipated in a flashover arc.

7.10 Typical Rectifier Troubles. Faulty operation of transmitters and receivers is often due to a fault in the power supply system.

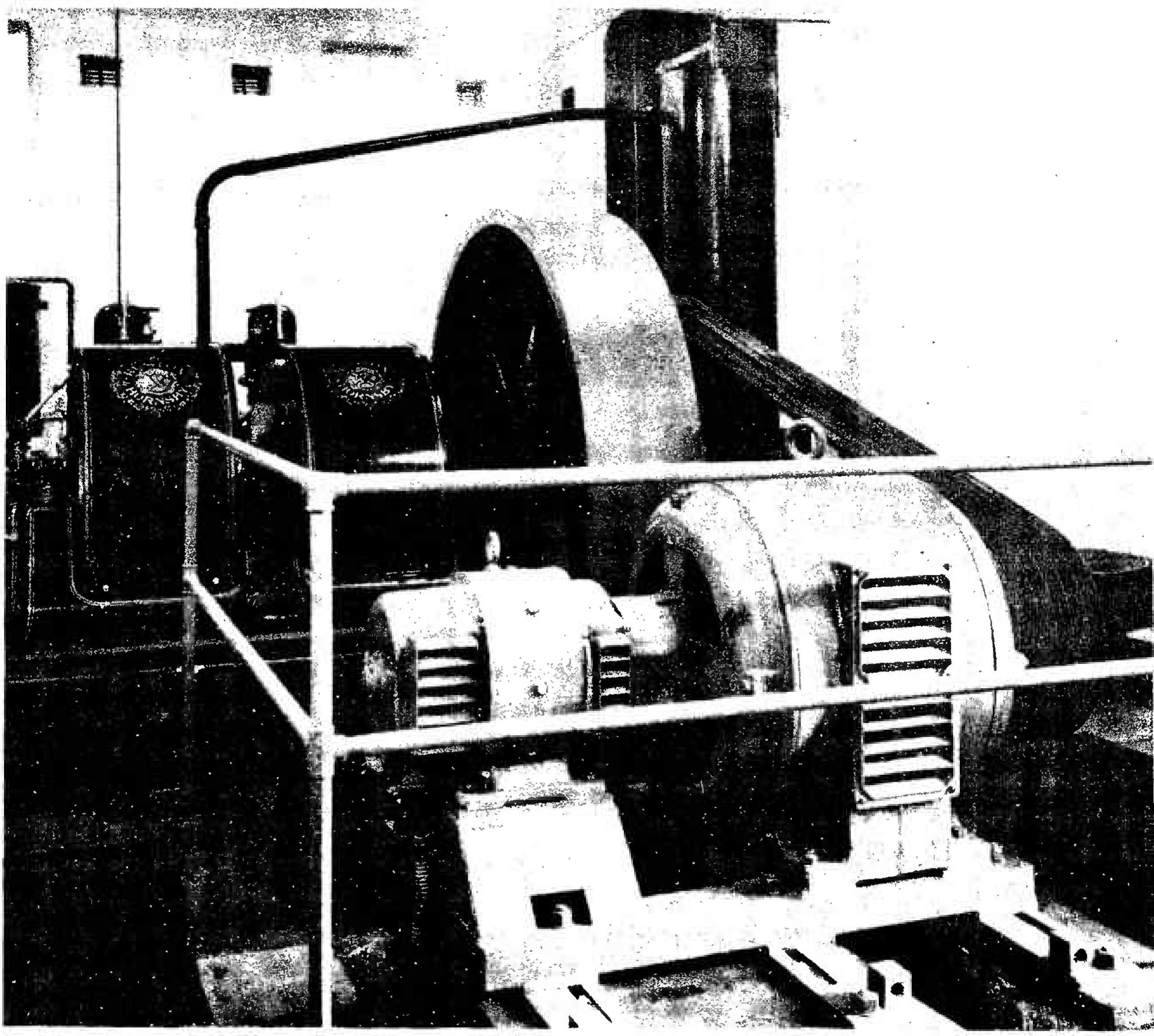

EMERGENCY POWER PLANT.
10 kW TRANSMITTER, LYNDHURST.

Typical faulty conditions are -

(i) Faulty rectifier valve.
(ii) No output voltage from rectifier.
(iii) Variation of normal output.
(iv) Interference to radio circuits.
(v) Unsatisfactory filtering.

(i) If a high vacuum type of valve is in use, a faulty valve may be detected by a decrease in output voltage of rectifier. If a mercury-vapour type, the absence of the customary "blue-haze" during operation is a good indication of a faulty valve. This fault may be due to filament de-activation or entrance of air into valve.

(ii) Faulty valve as in (i), faulty relays, contacts, door or gate switches, etc.

(iii) An incorrect load on the voltage-divider caused by an earth or open circuit in equipment would cause trouble in the rectifier, affecting its output and possibly burning out portions of the voltage-divider.

(iv) Sometimes a type of interference called "bash" is encountered when using mercury-vapour rectifiers. This trouble is caused by the sudden vaporisation of the mercury-vapour at the start of each alternation. A remedy is to place an earthed shield over each rectifier valve and a radio frequency choke in each plate lead at the rectifier socket.

(v) A common cause of trouble in a rectifier system is the blowing out or breaking down of a condenser, due to excessive voltage or current surges.

Similarly a choke may be open or short-circuited or even partially short-circuited.

Tests for this condition are simple continuity tests as described elsewhere (Applied Electricity II).

8. ANODE POWER FROM LOW VOLTAGE D.C. SOURCES.

8.1 It is often advantageous to be able to obtain anode voltages from a low voltage D.C. source, such as a car battery. The battery can be used to supply the filaments directly, and to operate a simple system to supply anode voltages.

Two methods are in general use -

(i) Vibrator system.
(ii) Dynamotor system.

8.2 D.C. at high voltage can be obtained from a storage battery by using a vibrating contact to change the D.C. delivered by the battery into A.C. that can be stepped up in voltage by a transformer and rectified. A typical arrangement is shown in Fig. 21a.

Here, a vibrating reed is provided, with contacts connected in the circuit in such a manner that the D.C. voltage is first applied across one-half of the primary winding of a transformer, and then in the opposite direction across the other half. This induces an alternating voltage in the secondary, having a value determined by the battery voltage and the transformer ratio. The reed is kept i vibration at its frequency of mechanical resonance by the magnet M which is so arranged that when the reed is drawn to the magnet, th terminals of the latter are short-circuited and the reed is allowe to spring back. The resistances R_1 and capacity C_1 in Fig. 21a are for the purpose of minimising sparking at the contacts, and the buffer condenser C associated with the secondary, as well as the radio frequency chokes, are essential to control transient voltages and to prevent radio interference.

The secondary voltage developed by the transformer associated with the vibrator can be rectified by a rectifier valve, as in Fig. 21a. This system is known as the "non-synchronous" type of vibrator power supply. Both high-vacuum and cold-cathode rectifiers may be used in this circuit.

The vibrating reed normally has a resonant frequency of the order of 90 to 150 c/s. The associated transformer and filter system are designed accordingly, instead of for a 50 c/s fundamental. In the design, it is important to remember that the wave-shapes tend to be square rather than sinusoidal. The transformer should have the lowest possible leakage inductance to minimise sparking, and should operate at a low flux density.

Fig. 21b shows the "synchronous" type of vibrator, the differences being an extra set of contacts on the reed, and the absence of a rectifier valve.

/ Fig. 21.

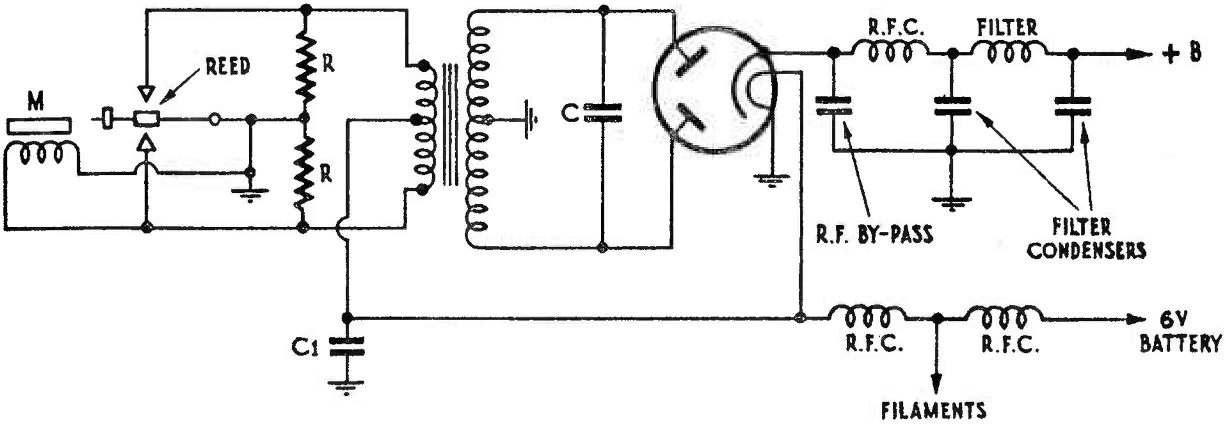

(a) Non-Synchronous Vibrator Power Supply.

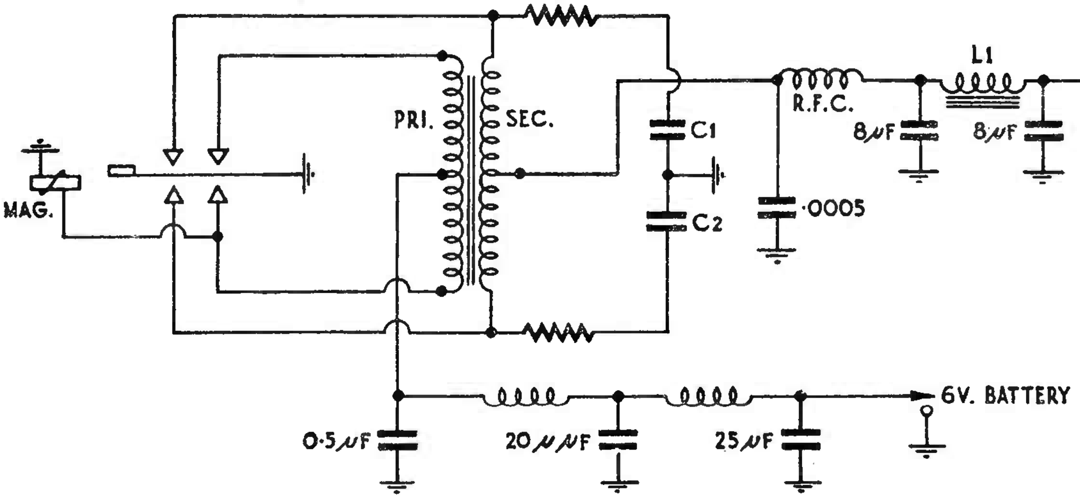

(b) Synchronous Vibrator Power Supply.

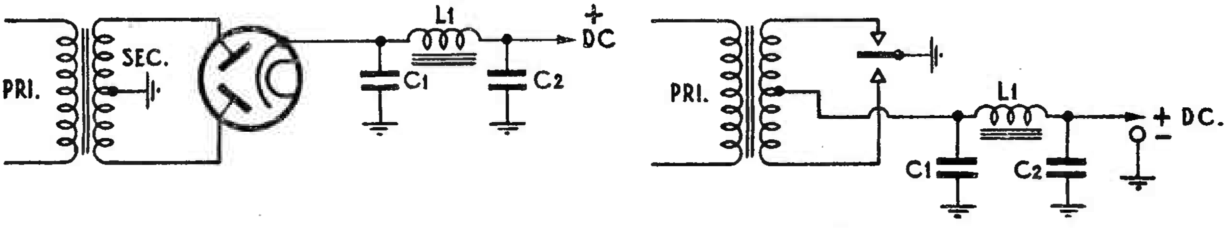

(c) Simplified Circuits of Figs. 21a and 21b.

ANODE POWER FROM D.C. SOURCES.

FIG. 21.

Despite the saving of the cost of the rectifier valve and the elimination of voltage drop across the valve, this system is more expensive and more likely to get out of order.

These vibrators are termed synchronous because the primary and secondary contacts operate in synchronism, also "double" since there are two complete sets of full-wave contacts.

In this type, the second pair of contacts take the place of the anodes of the rectifiers, and the centre-tap of the secondary, instead of being earthed as in Fig. 21a, becomes the positive side of the output, taking the place of the cathode of the rectifier valve in Fig. 21a. This may be seen from Fig. 21c, which shows portions of the other two circuits re-sketched.

It will be seen from Fig. 21b that each time one half of the primary receives a pulse, an amplified pulse is sent from the associated secondary winding to the output circuit. When the vibrating reed swings over to the other contacts, the other valves of the primary and secondary windings function as did the first. Full-wave rectification takes place because each half of the secondary contributes to the output circuit in turn.

8.3 Dynamotor. A dynamotor is a combined motor generator having two or more separate armature windings and a common field. One of the armature windings is operated from a low voltage source of D.C, while the other windings serve as generators to produce the desired D.C. voltages.

Dynamotors range in size and rating from those driven from a 6 V battery and supplying power for radio receivers or small transmitters, to large machines supplying power for medium power transmitters.

When anode power is obtained from dynamotors, it is necessary to place a filter in the output of the machine to eliminate ripple voltage arising from the finite number of commutator bars and from miscellaneous irregularities.

/ Engine-Generator

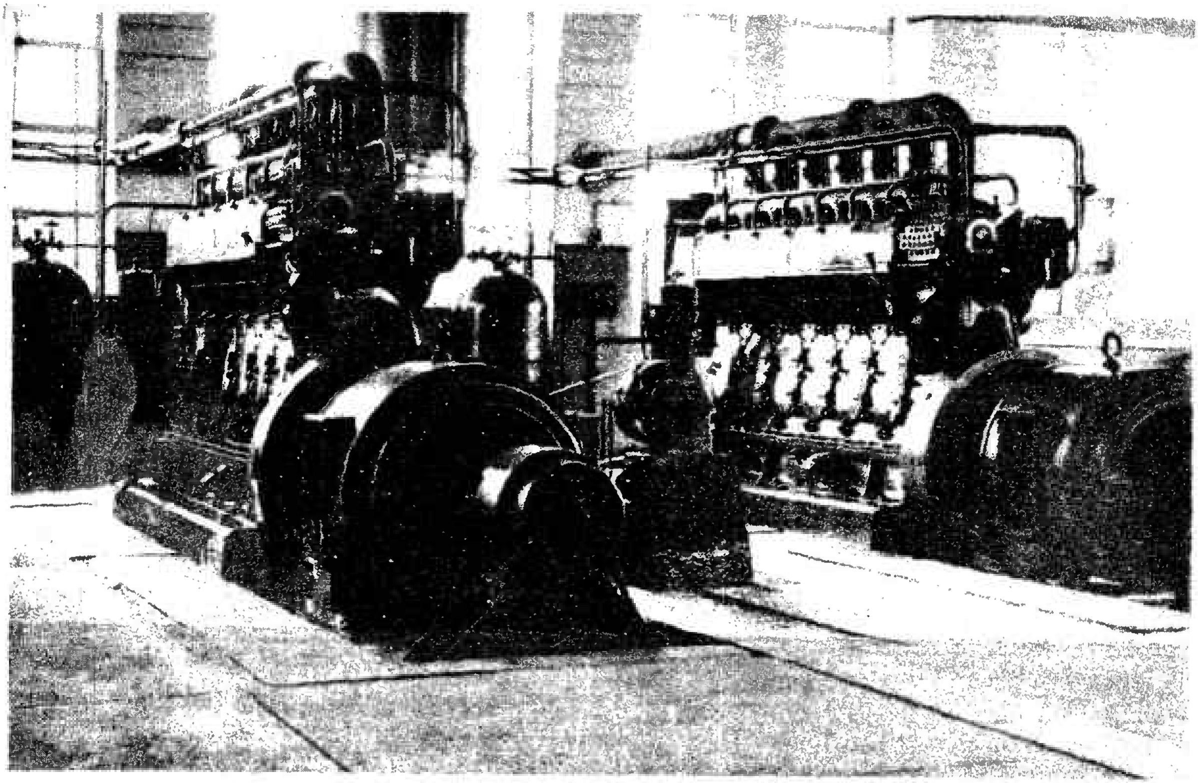

ENGINE-GENERATOR SETS FOR 10 kW STATIONS
WHERE MAINS SUPPLY IS NOT AVAILABLE.

9. HUM IN A.C. HEATED CATHODES.

9.1 When A.C. is used to heat the cathode of a thermionic valve, it is to be expected that the amplified output of the valve will contain a certain amount of hum. This hum is either in the form of alternating components in the anode current that are in harmonic relationship to the heating voltage, or in the form of a corresponding modulation of the voltages and currents being amplified by the valve.

Hum from A.C. filament current - the chief causes of hum in filament valves are -

(i) Alternating voltage drop in a filament.

(ii) Magnetic effect of the A.C. filament current on the space current.

(iii) Temperature variation of the cathode.

9.2 The effect of an alternating voltage drop in a filament cathode upon the anode current can be minimised by connecting the grid and anode return leads to a point having the same potential as the centre of the filament. This can be done by the use of either a centre-tapped resistance across the filament or a centre-tapped winding on the filament transformer. Connecting the grid or anode return leads in this way eliminates the principal cause of hum having the same frequency as the filament heating current. However, even with a centre-tapped filament connection, there still remains a residual component of hum having twice the supply frequency. This results from the fact that, with a centre-tapped connection, the half of the filament that is negative at the moment supplies more electrons to the anode than does the positive half, since the electron is proportional to the three-halves power of the electrostatic field strength, the current from the negative end of the field is increased more by the voltage drop than the current drawn from the positive end is decreased. Hence, each time there is a voltage drop, which is twice per cycle, the space current increases.

9.3 The magnetic field produced by the filament current introduces a double-frequency hum by virtue of the fact that the electrostatic

/ field

field deflects the electrons from the paths that they would otherwise follow, and so tends to decrease the anode current slightly. This effect is out of phase with that of paragraph 9.2, and, by proper design, they can be made to cancel each other in the normal operating condition.

9.4 A.C. filament current produces its maximum heating effects at the peaks of the cycle. The filament temperature, and, hence, the emission, accordingly fluctuate at twice the supply frequency. However, this effect is not very troublesome.

Factors tending to reduce hum with A.C. filament heating are -

(i) Filament designed for relatively low voltage and high current.

(ii) V or W arrangement of filament wires to reduce magnetic effect and to permit exchange of electrons between opposite ends of filament, in order to minimise the effect of voltage drop in the filament.

(iii) Valve design such that the magnetic and voltage drop components of hum are approximately equal at the usual operating point.

Filamentary cathodes are always used in large high-vacuum valves, in many mercury-vapour rectifying valves, and in some small power valves. Seldom in radio frequency or audio frequency voltage amplifiers or detectors, except in the case of battery type valves.

/ High

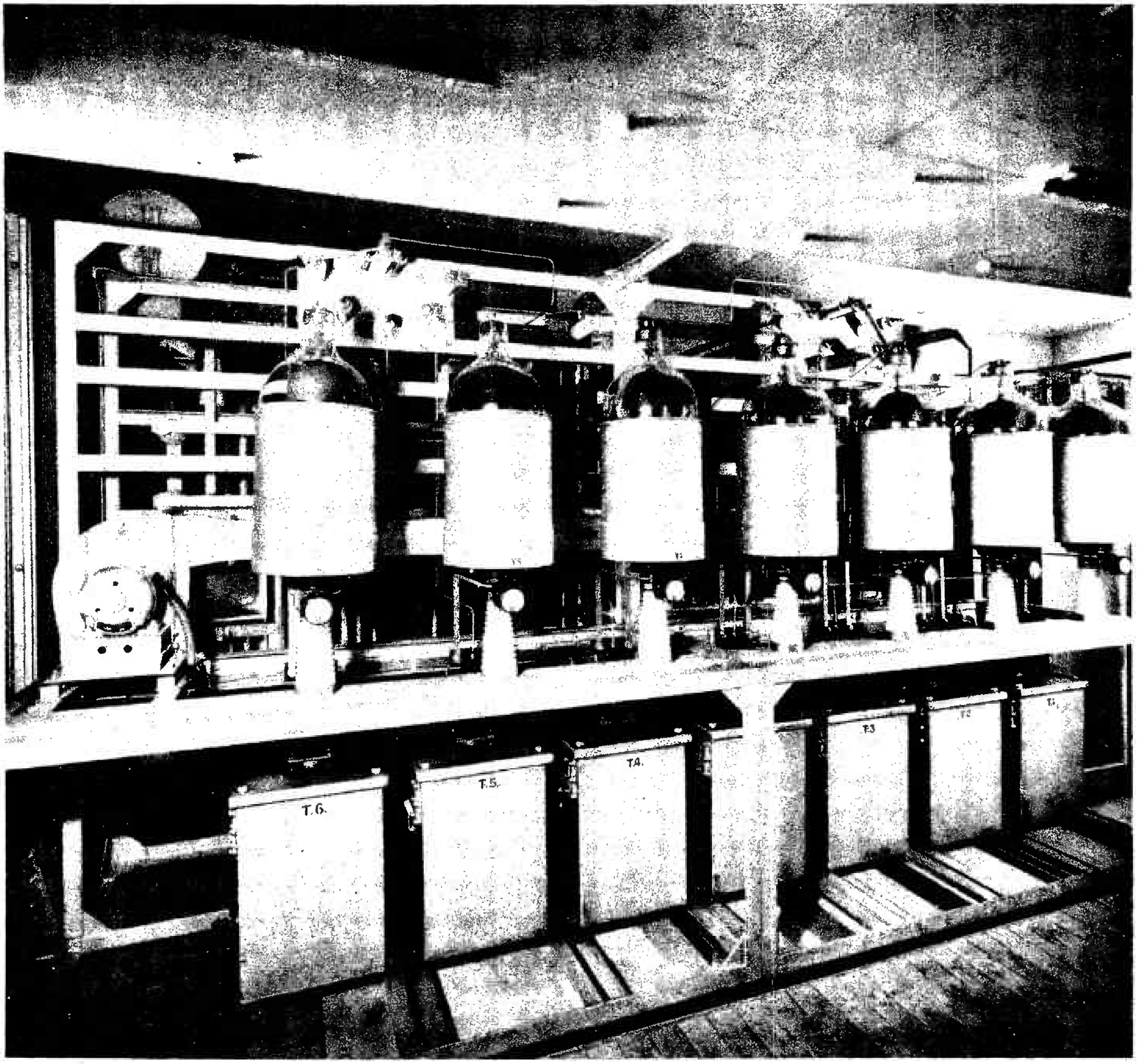

HIGH TENSION RECTIFIER FOR 200 kW TRANSMITTER.

10. HUM WITH HEATER CATHODES.

10.1 It might be as well here to amplify some remarks on hum with heater type cathodes appearing in an earlier Paper in Radio I.

The use of a heater type cathode removes most of the factors that produce hum in filament valves, but there is still present a residual hum as a result of the following causes -

(i) Magnetic field produced by the heater current.
(ii) Leakage resistances from heater to other electrodes.
(iii) Electrostatic fields within the valve arising from unshielded portions of the heater or heater leads.
(iv) Electron emission from the heater.

10.2 The magnetic field of the heater introduces a double-frequency hum, just as in filament valves. This can be minimised by using a high-voltage low current heater, and designing heater so that a minimum of external field is produced.

10.3 Leakage paths from the heater to other electrodes cause voltages of the power supply frequency to be developed between the electrodes and earth. The most important of these is that from heater to cathode. Any leakage current of this character must flow through the bias resistance between cathode and earth, and will produce a voltage that is effectively applied between grid and cathode.

Hum from this source may be eliminated by -

(i) Adequate by-passing of the bias resistance.
(ii) Earthing the cathode.

10.3 Unshielded portions of the heater produce electrostatic fields that may influence the anode current and result in 50 c/s hum.

Electrostatic fields from the heater leads may also have direct capacitive coupling to other electrodes, and result in the production of hum voltages that are not negligible if the electrode impedance to earth is large.

10.4 Conclusion. This Paper has been confined to electronic sources of power, but, of course, the various voltages required by transmitters, etc., may be obtained from generators, batteries, etc. Details of generators and motors and their operation will be found in Applied Electricity II. In connection with transmitters, it should have been mentioned that most main stations have emergency power supplies obtained from Diesel driven generators, which supply the required 3-phase power to enable the transmitters to work on either full or reduced outputs, depending on the actual kVA requirements.

/ 11.

11. TEST QUESTIONS.

1. Describe two types of thermionic valve rectifiers for providing anode power supply.

2. Give details of the connections for a 3-phase transformer.

3. Describe the various types of rectifier filter circuits.

4. How is D.C. saturation reduced in a transformer?

5. What is voltage regulation? Describe one method.

6. Why are transformers shielded? Describe one method of shielding.

7. Define maximum inverse peak voltage.

8. Draw a simple voltage doubling circuit.

9. Discuss heating in a transformer.

10. How are transformers rated?

11. What losses occur in rectifier apparatus?

12. How does the arc-back indicator operate?

END OF PAPER.